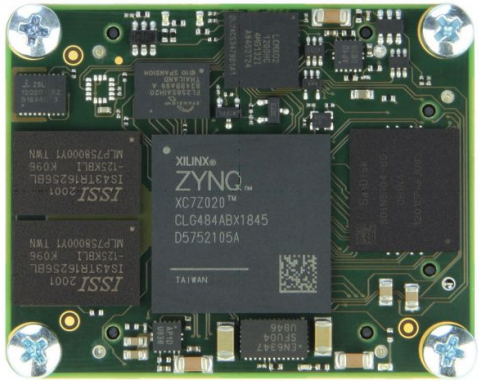

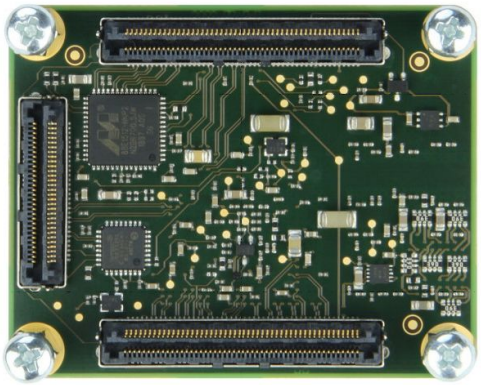

Regarding the usage of our schematics and alike documentation for Trenz module TE0720.

Project is protected under copyright and we strongly and strictly prohibit the reverse engineering or recreation, even if the design is just adapted or modified. TE0720 is protected under such right and in case of plagiarism we will have to do anything necessary in order to protect our assets.

Schematics and other handouts serve for informational purposes only!

trenz electronic	Title: GigaZee		
A4	Number: TE0720 62I320M		Rev. 04
Date: 2022-01-19	Copyright: Trenz Electronic GmbH / TT		Page 1 of 20
Filename: Legal Notices Modules.SchDoc			

REV	Description	
-01	Initial revision	
-02		
-03		
-04	1. Revised power supply circuit, replaced next components: - EN6347QI (U1) by MPM3840GQV-Z, - EP53F8QI (U2, U3) by MPM3834CGPA, - TPS27082LDDCR (Q1) by MP5077GG-Z. 2. Added power supervisor BD39040MUF (U27). Next signal connected to system controller: - PG_All (U27 - U19.C12) with pull-up resistor R67; - WDEN (U27.13 - U19.C6) with pull-down resistor R80; - WDIN (U27.14 - U19.N8); - WDOUT (U27.16 - U19.M3). 3. Signal MIO8 (U5.E5) connected to system controller (U19.N7) 4. Added pull-down resistors R64 (net ON_1V0) and R65 (net ON_1V8) 5. Revised voltage supervisor U26 circuit: U26.6 (VDD) connected to 3.3VIN, Added protection diode D3 to U26.3 (#MR input) 6. Replaced BKP0603HS (L1, L2, L3, L4, L5, L7, L8) by MPZ0603S121HT000 7. Auxiliary information has been added on Samtec B2B connectors page 8. PCB: Revised layout of power supplies 9. PCB: Revised layout of Samtec B2B signals. The length of the tracks has been changed. Pinout of Samtec B2B connectors not affected 10: PCB: Added option to install Heatsink SuperGrip (c) 11. Added capacitors C7, C8 (100uF, 1V) 12. Changed voltage divider resistors (R21, R61) to set the threshold for U26.	VY
-04A	1. Added note regarding VCCIO34, page B2B-Connectors	VY

trenz electronic	Title: GigaZee - Revision History		
A4	Number: TE0720 62I320M		Rev. 04
Date: 2022-01-19	Copyright: Trenz Electronic GmbH		Page 2 of 20
Drawn by: VY	Filename: Revision Changes.SchDoc		

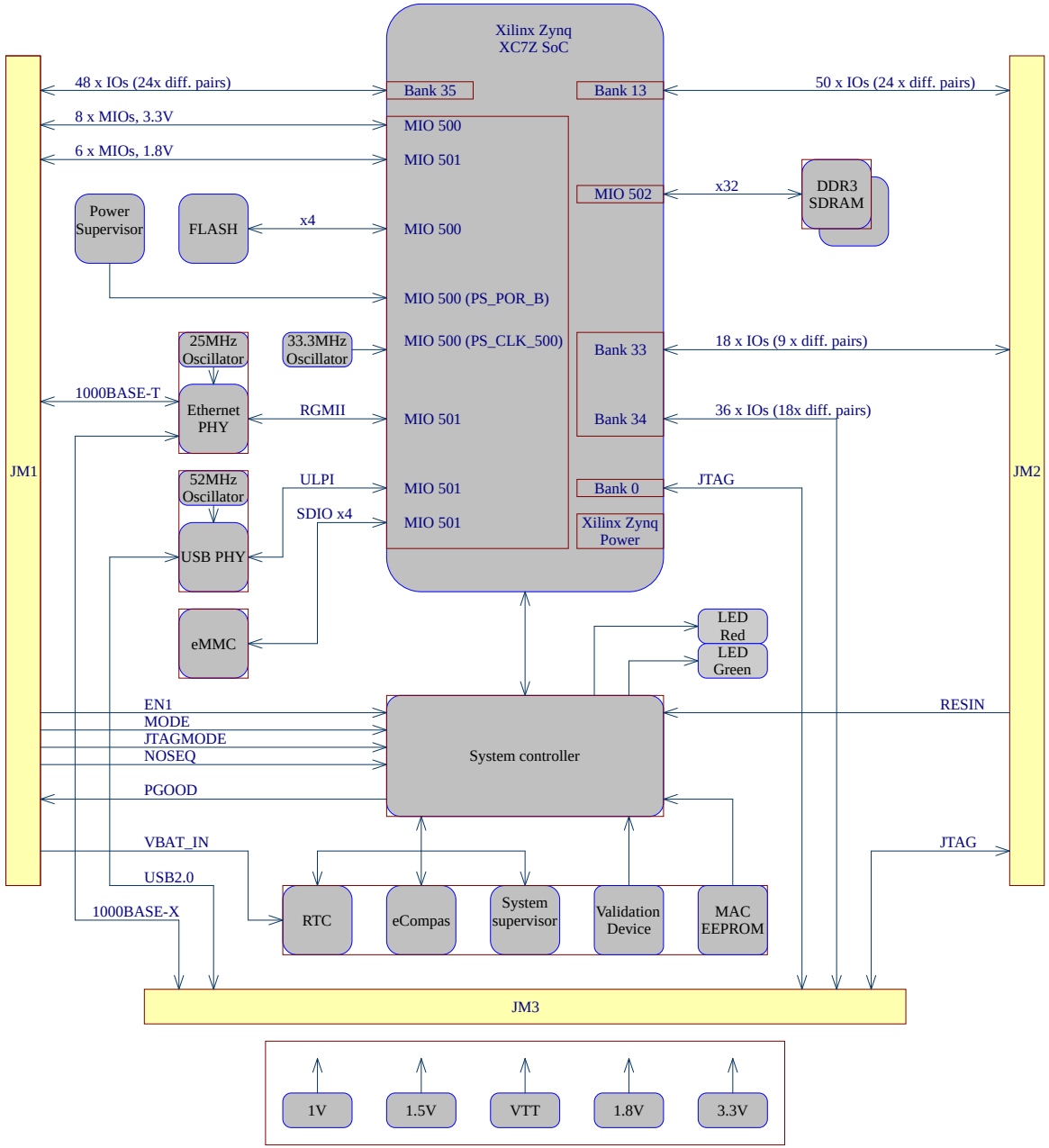

U_Legal Notices Modules
Legal Notices Modules.SchDoc

U_Power_Diagram
Power_Diagram.SchDoc

U_Revision Changes
Revision Changes.SchDoc

U_TE0720
TE0720.SchDoc

Special notes:

trenz electronic	Title: GigaZee - System Overview		
A4	Number: TE0720 62I320M		Rev. 04
Date: 2022-01-19	Copyright: Trenz Electronic GmbH		Page 3 of 20
Filename: Overview.SchDoc			

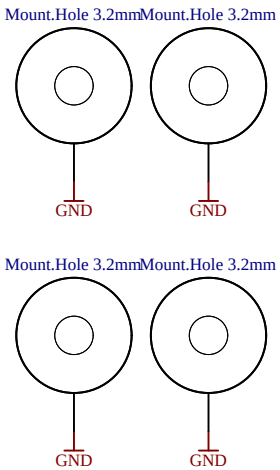

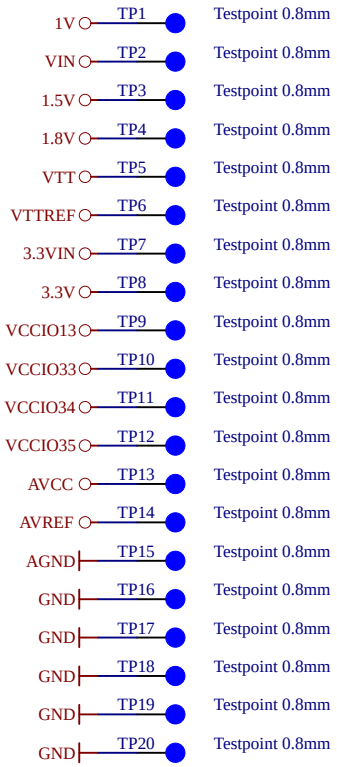

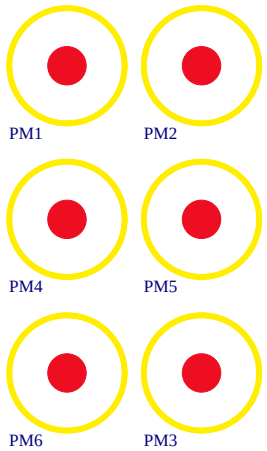

Serial
Serial
Serialnumber 6,3 x 6.3mm

Assembly variant	62I320M
Created by	VY
Modified by	VY
Modified at	2020-11-19
SVN Revision	13140

trenz electronic

Title: GigaZee - TE0720			
A4	Number: TE0720 62I320M		Rev. 04
Date: 2022-01-19	Copyright: 2013 Trenz Electronic GmbH		Page 4 of 20
Drawn by: VY	Filename: TE0720.SchDoc		

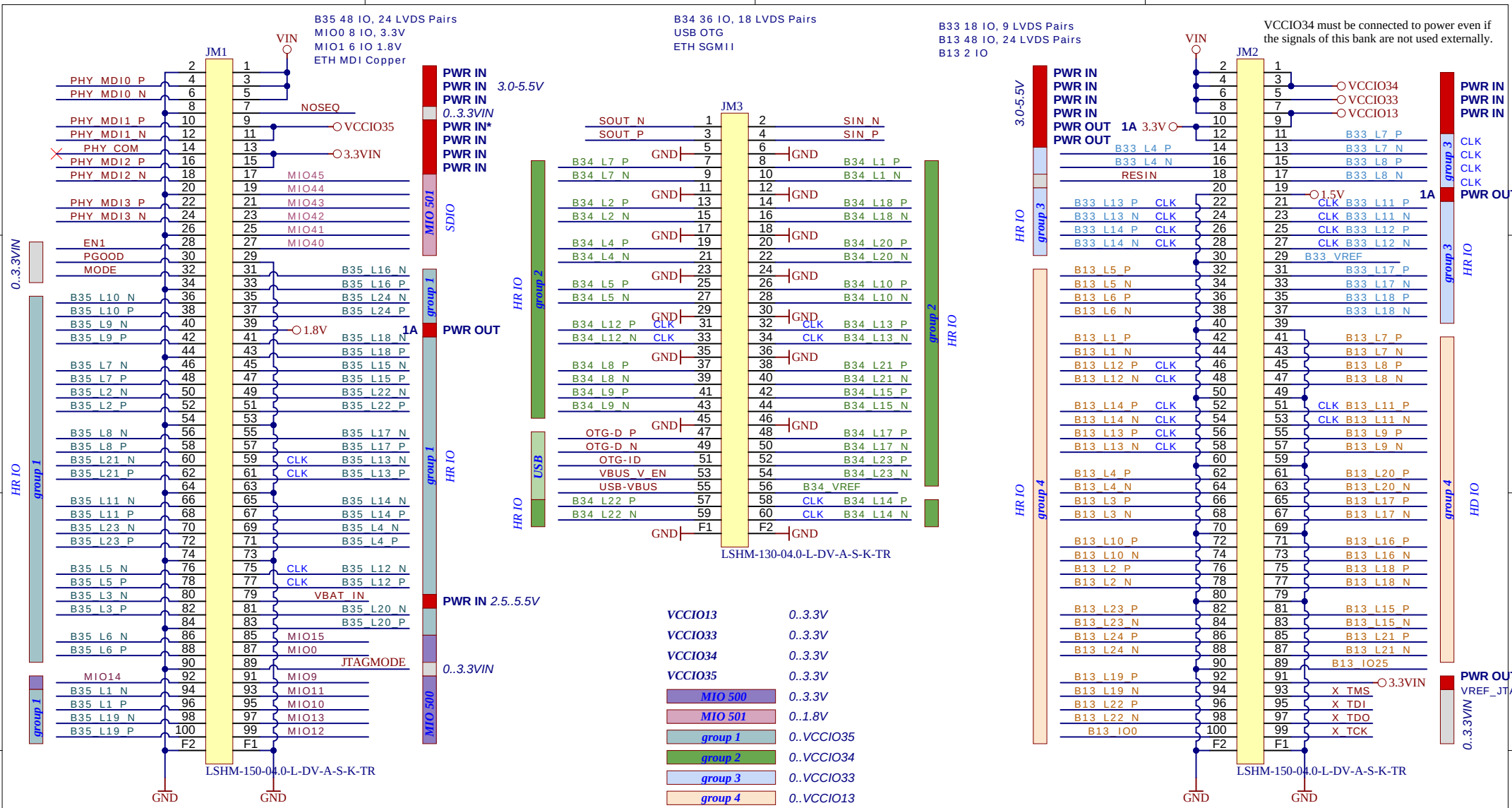

Title: GigaZee - B2B Connector			
A4	Number: TE0720 62I320M		Rev. 04
Date: 2022-01-19	Copyright: 2013 Trenz Electronic GmbH		Page5 of 20
Filename: B2B-Connectors.SchDoc			

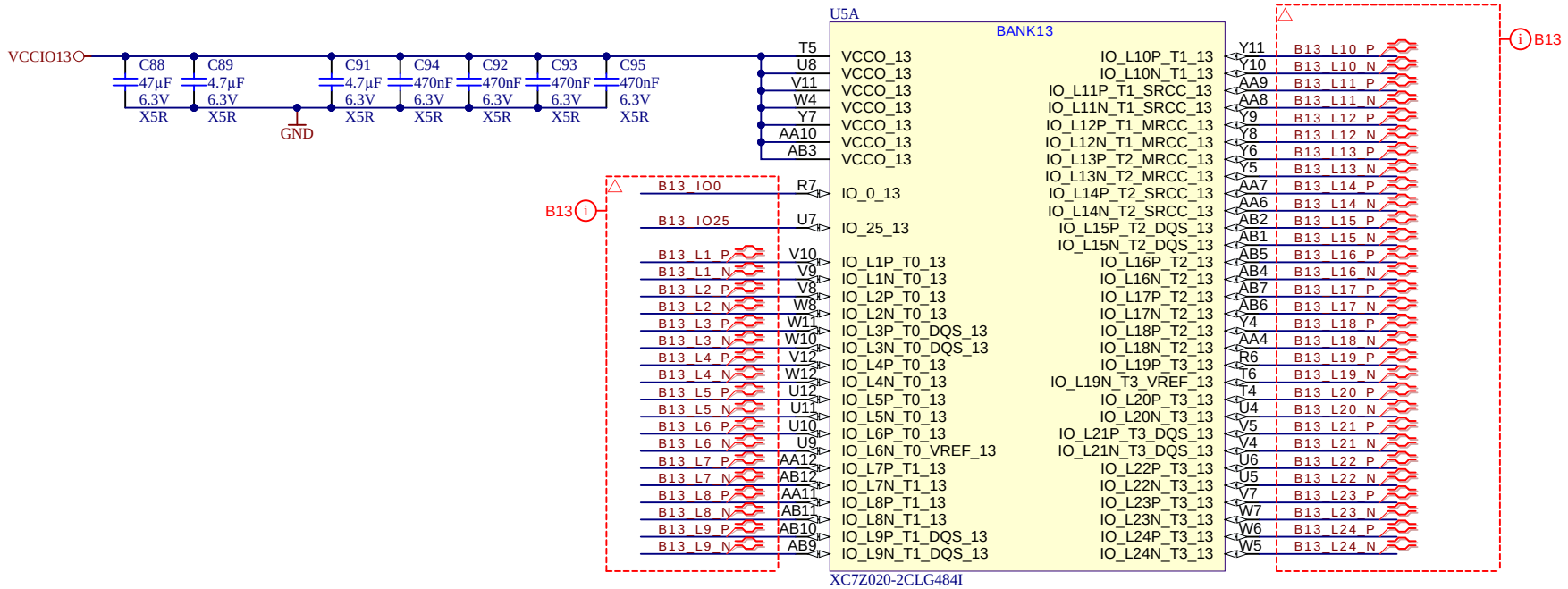

trenz electronic	Title: GigaZee - B13		
A4	Number: TE0720 62I320M		Rev. 04
Date: 2022-01-19	Copyright: 2013 Trenz Electronic GmbH		Page6 of 20
Filename: B13.SchDoc			

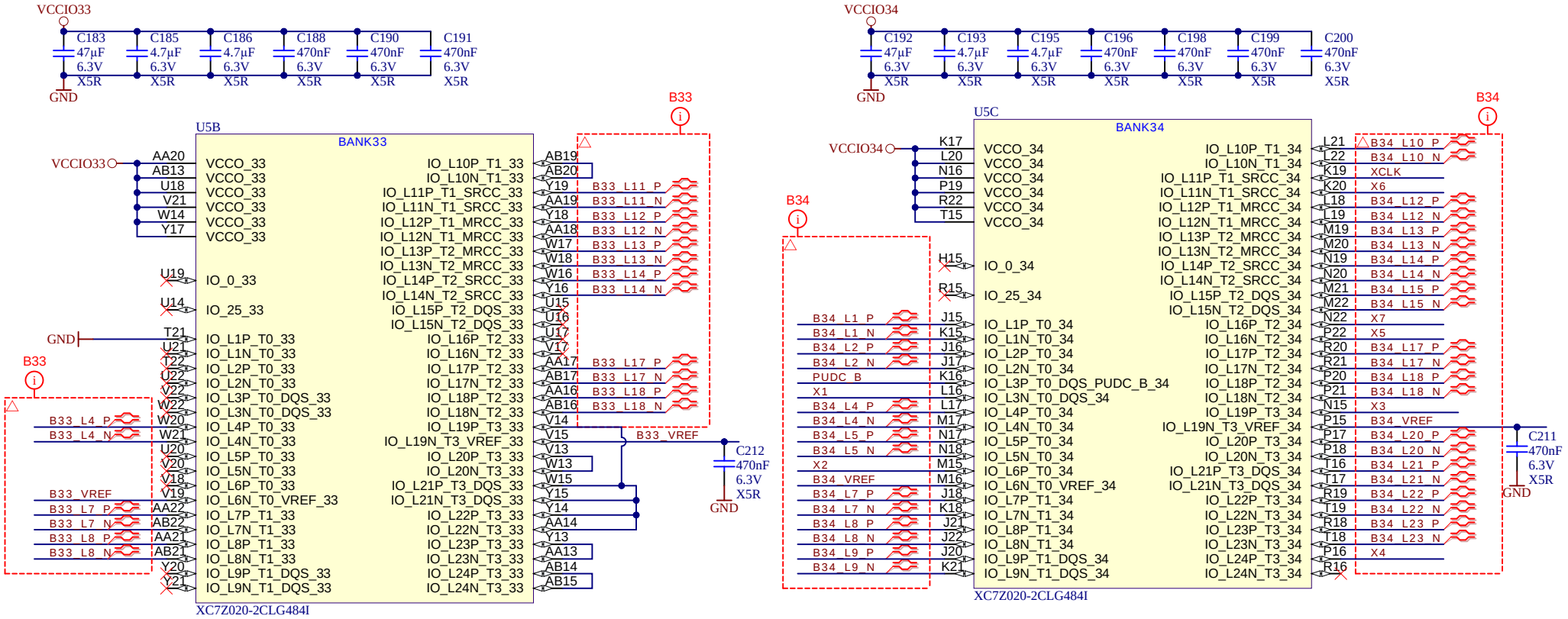

trenz electronic	Title: GigaZee - B33 - B34		
A4	Number: TE0720 62I320M		Rev. 04
Date: 2022-01-19	Copyright: 2013 Trenz Electronic GmbH		Page7 of 20
Filename: B33-B34.SchDoc			

trenz electronic	Title: GigaZee - B35		
A4	Number: TE0720 62I320M		Rev. 04
Date: 2022-01-19	Copyright: 2013 Trenz Electronic GmbH		Page8 of 20
Filename: B35.SchDoc			

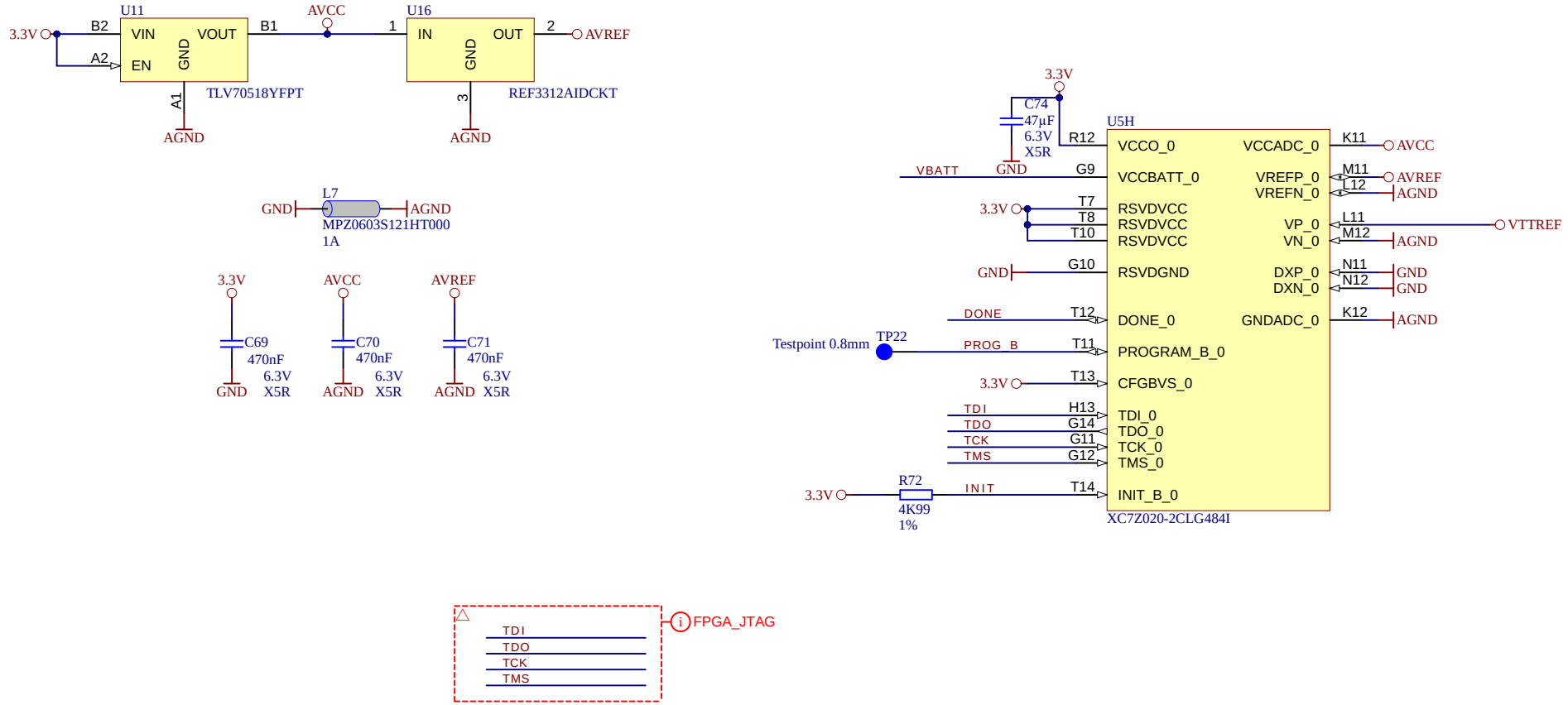

trenz electronic	Title: GigaZee - B0		
A4	Number: TE0720 62I320M		Rev. 04
Date: 2022-01-19	Copyright: 2013 Trenz Electronic GmbH		Page9 of 20
Filename: FPGA-MISC.SchDoc			

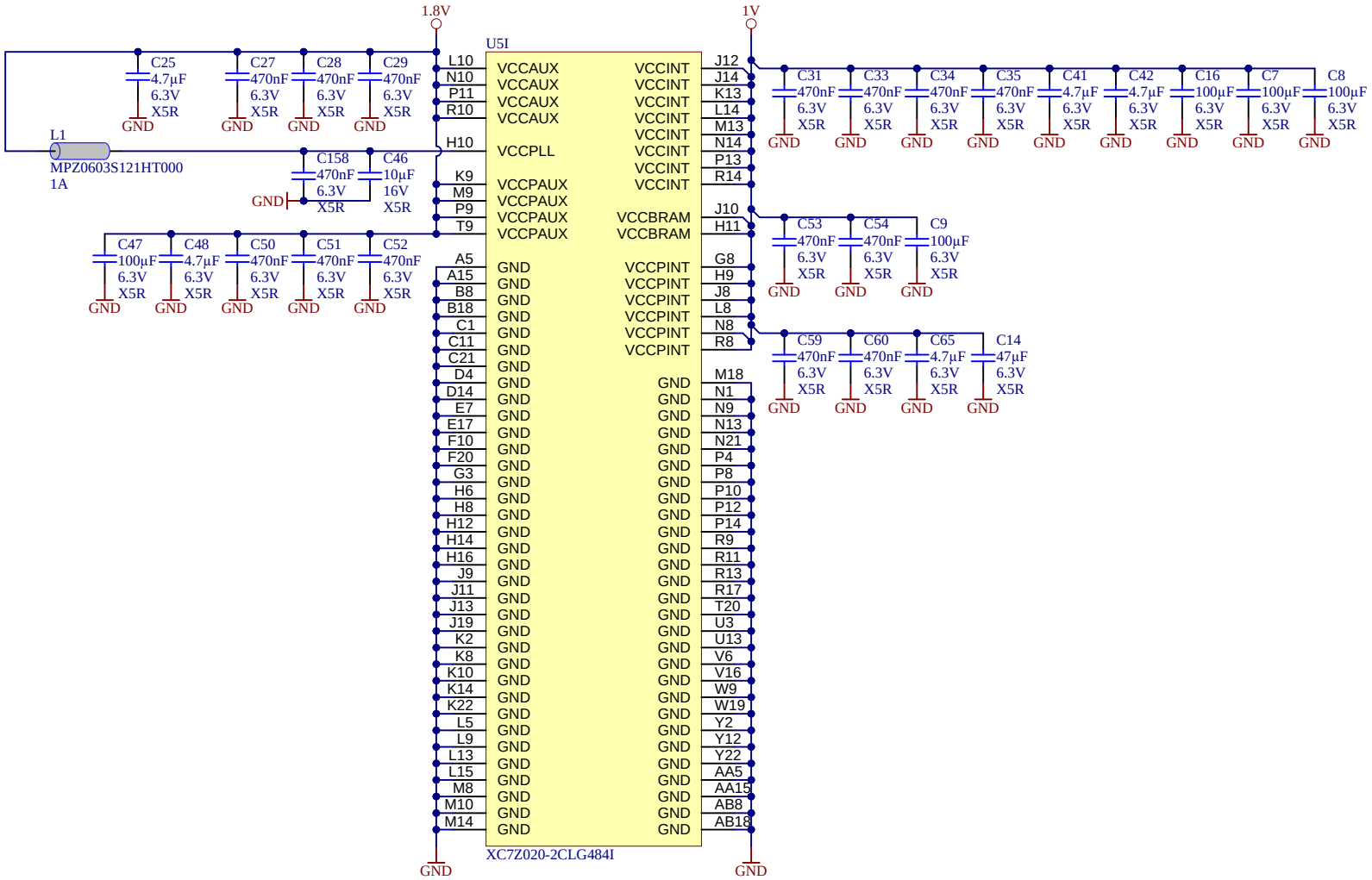

trenz electronic

Title: GigaZee - FPGA Power			
A4	Number: TE0720 62I320M		Rev. 04
Date: 2022-01-19	Copyright: 2013 Trenz Electronic GmbH		Page10 of 20
Filename: FPGA-PWR.SchDoc			

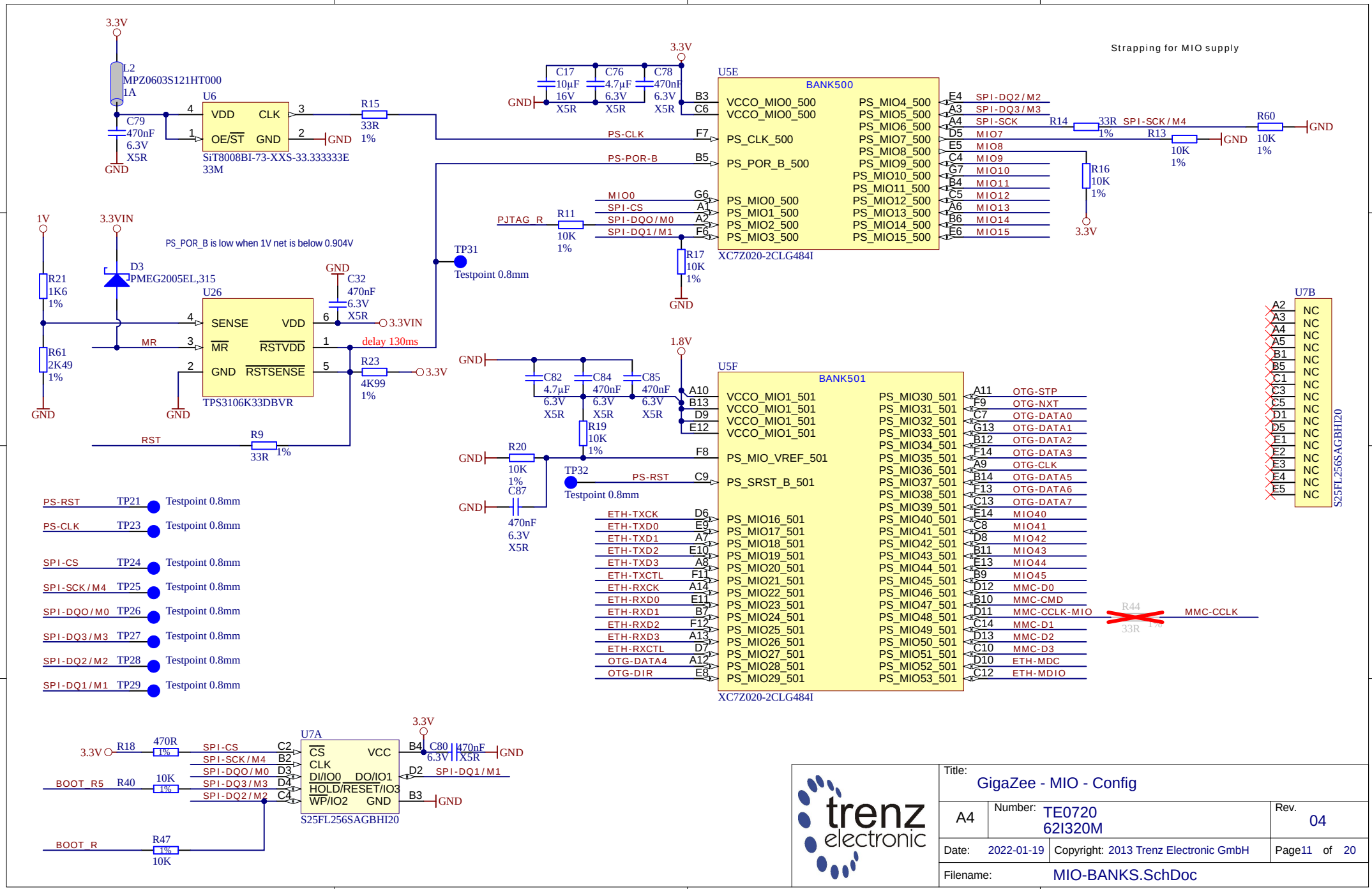

Title: GigaZee - MIO - Config			
A4	Number: TE0720 62I320M		Rev. 04
Date: 2022-01-19	Copyright: 2013 Trenz Electronic GmbH		Page11 of 20
Filename: MIO-BANKS.SchDoc			

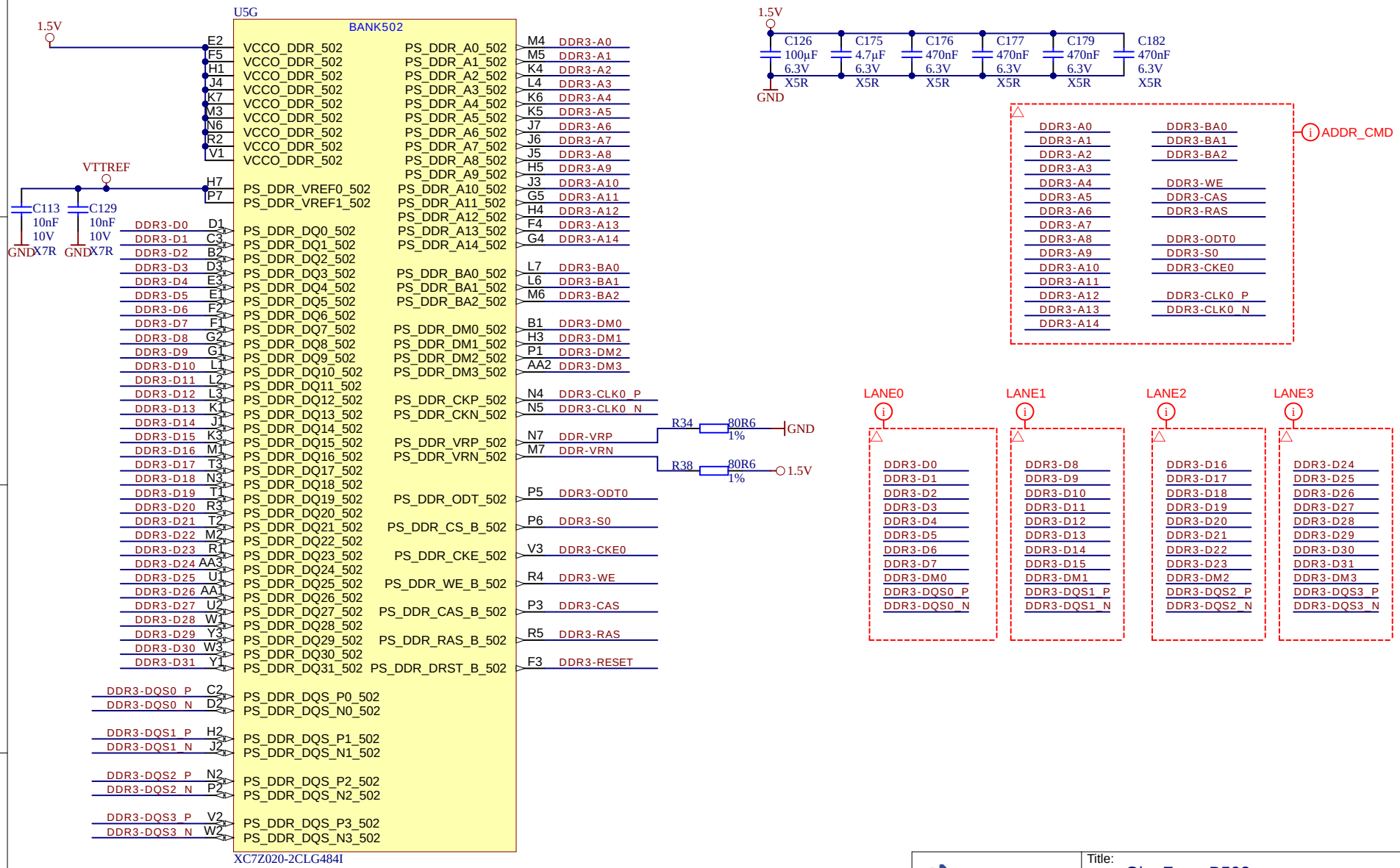

Title: GigaZee - B502			
A4	Number: TE0720 62I320M		Rev. 04
Date: 2022-01-19	Copyright: 2013 Trenz Electronic GmbH		Page12 of 20
Filename: PS-DDR.SchDoc			

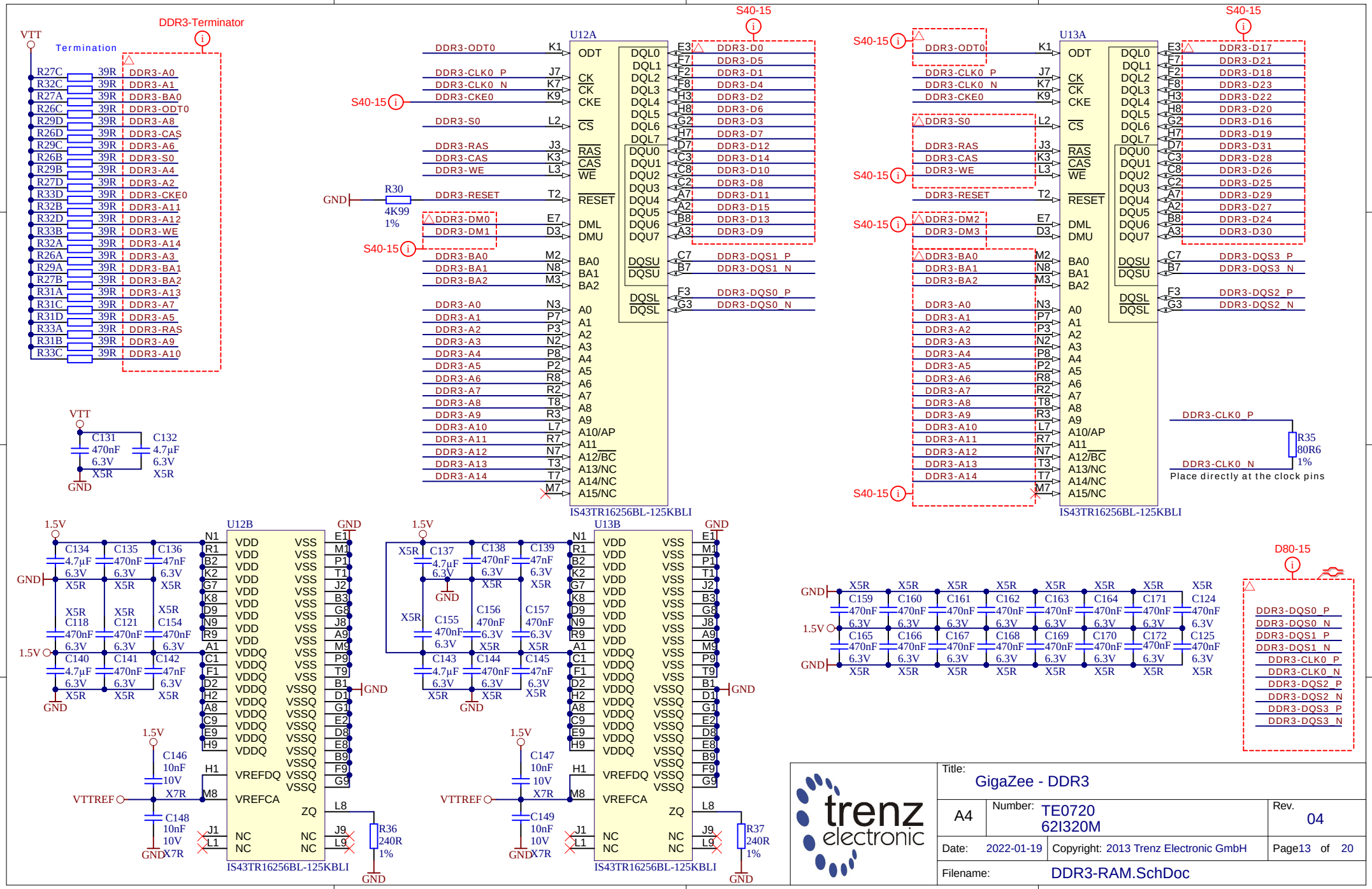
DDR3-Terminator
Termination
VTT
R27C 39R DDR3-A0
R32C 39R DDR3-A1
R27A 39R DDR3-BA0
R26C 39R DDR3-ODT0
R29D 39R DDR3-A8
R26D 39R DDR3-CAS
R29C 39R DDR3-A6
R26B 39R DDR3-S0
R29B 39R DDR3-A4
R27D 39R DDR3-A2
R33D 39R DDR3-CKE0
R32B 39R DDR3-A11
R32D 39R DDR3-A12
R33B 39R DDR3-WE
R32A 39R DDR3-A14
R26A 39R DDR3-A3
R29A 39R DDR3-BA1
R27B 39R DDR3-BA2
R31A 39R DDR3-A13
R31C 39R DDR3-A7
R31D 39R DDR3-A5
R33A 39R DDR3-RAS
R31B 39R DDR3-A9
R33C 39R DDR3-A10
VTT
C131 470nF 6.3V X5R
C132 4.7µF 6.3V X5R
GND
U12A
S40-15
DDR3-ODT0 K1 ODT
DDR3-CLK0_P J7 CK
DDR3-CLK0_N K7 CK
DDR3-CKE0 K9 CKE
S40-15
DDR3-S0 L2 CS
DDR3-RAS J3 RAS
DDR3-CAS K3 CAS
DDR3-WE L3 WE
GND R30 4K99 1%
DDR3-RESET T2 RESET
DDR3-DM0 E7 DML
DDR3-DM1 D3 DMU
S40-15
DDR3-BA0 M2 BA0
DDR3-BA1 N8 BA1
DDR3-BA2 M3 BA2
DDR3-A0 N3 A0
DDR3-A1 P7 A1
DDR3-A2 P3 A2
DDR3-A3 N2 A3
DDR3-A4 P8 A4
DDR3-A5 P2 A5
DDR3-A6 R8 A6
DDR3-A7 R2 A7
DDR3-A8 T8 A8
DDR3-A9 R3 A9
DDR3-A10 L7 A10/AP
DDR3-A11 R7 A11
DDR3-A12 N7 A12/BC
DDR3-A13 T3 A13/NC
DDR3-A14 T7 A14/NC
M7 A15/NC
DQL0 DQL1 DQL2 DQL3 DQL4 DQL5 DQL6 DQL7
DQU0 DQU1 DQU2 DQU3 DQU4 DQU5 DQU6 DQU7
DQSU DQSU
DQSL DQSL
E3 DDR3-D0
F7 DDR3-D5
F2 DDR3-D1
F8 DDR3-D4
H3 DDR3-D2
H8 DDR3-D6
G2 DDR3-D3
H7 DDR3-D7
D7 DDR3-D12
C3 DDR3-D14
C8 DDR3-D10
C2 DDR3-D8
A7 DDR3-D11
A2 DDR3-D15
B8 DDR3-D13
A3 DDR3-D9
C7 DDR3-DQS1_P
B7 DDR3-DQS1_N
F3 DDR3-DQS0_P
G3 DDR3-DQS0_N
IS43TR16256BL-125KBLI
U13A
S40-15
DDR3-ODT0 K1 ODT
DDR3-CLK0_P J7 CK
DDR3-CLK0_N K7 CK
DDR3-CKE0 K9 CKE
DDR3-S0 L2 CS
DDR3-RAS J3 RAS
DDR3-CAS K3 CAS
DDR3-WE L3 WE
DDR3-RESET T2 RESET
DDR3-DM2 E7 DML
DDR3-DM3 D3 DMU
DDR3-BA0 M2 BA0
DDR3-BA1 N8 BA1
DDR3-BA2 M3 BA2
DDR3-A0 N3 A0
DDR3-A1 P7 A1
DDR3-A2 P3 A2
DDR3-A3 N2 A3
DDR3-A4 P8 A4
DDR3-A5 P2 A5
DDR3-A6 R8 A6
DDR3-A7 R2 A7
DDR3-A8 T8 A8
DDR3-A9 R3 A9
DDR3-A10 L7 A10/AP
DDR3-A11 R7 A11
DDR3-A12 N7 A12/BC
DDR3-A13 T3 A13/NC
DDR3-A14 T7 A14/NC
M7 A15/NC
E3 DDR3-D17
F7 DDR3-D21
F2 DDR3-D18
F8 DDR3-D23
H3 DDR3-D22
H8 DDR3-D20
G2 DDR3-D16
H7 DDR3-D19
D7 DDR3-D31
C3 DDR3-D28
C8 DDR3-D26
C2 DDR3-D25
A7 DDR3-D29
A2 DDR3-D27
B8 DDR3-D24
A3 DDR3-D30
C7 DDR3-DQS3_P
B7 DDR3-DQS3_N
F3 DDR3-DQS2_P
G3 DDR3-DQS2_N
IS43TR16256BL-125KBLI
DDR3-CLK0_P
DDR3-CLK0_N
R35 80R6 1%
Place directly at the clock pins
1.5V
C134 4.7µF 6.3V X5R
C135 470nF 6.3V X5R
C136 47nF 6.3V X5R
C118 470nF 6.3V X5R
C121 470nF 6.3V X5R
C154 470nF 6.3V X5R
C140 4.7µF 6.3V X5R
C141 470nF 6.3V X5R
C142 47nF 6.3V X5R
GND
U12B
VDD VDDQ VREFDQ VREFCA ZQ NC
VSS VSSQ
VTTREF
C146 10nF 10V X7R
C148 10nF 10V X7R
R36 240R 1%
IS43TR16256BL-125KBLI
C137 4.7µF 6.3V X5R
C138 470nF 6.3V X5R
C139 47nF 6.3V X5R
C155 470nF 6.3V X5R
C156 470nF 6.3V X5R
C157 470nF 6.3V X5R
C143 4.7µF 6.3V X5R
C144 470nF 6.3V X5R
C145 47nF 6.3V X5R
U13B
C147 10nF 10V X7R
C149 10nF 10V X7R
R37 240R 1%
IS43TR16256BL-125KBLI
C159 470nF 6.3V X5R
C160 470nF 6.3V X5R
C161 470nF 6.3V X5R
C162 470nF 6.3V X5R
C163 470nF 6.3V X5R
C164 470nF 6.3V X5R
C171 470nF 6.3V X5R
C124 470nF 6.3V X5R
C165 470nF 6.3V X5R
C166 470nF 6.3V X5R
C167 470nF 6.3V X5R
C168 470nF 6.3V X5R
C169 470nF 6.3V X5R
C170 470nF 6.3V X5R
C172 470nF 6.3V X5R
C125 470nF 6.3V X5R
D80-15
DDR3-DQS0_P
DDR3-DQS0_N
DDR3-DQS1_P
DDR3-DQS1_N
DDR3-CLK0_P
DDR3-CLK0_N
DDR3-DQS2_P
DDR3-DQS2_N
DDR3-DQS3_P
DDR3-DQS3_N
trenz electronic
Title: GigaZee - DDR3
A4
Number: TE0720 62I320M
Rev. 04
Date: 2022-01-19
Copyright: 2013 Trenz Electronic GmbH
Page13 of 20
Filename: DDR3-RAM.SchDoc

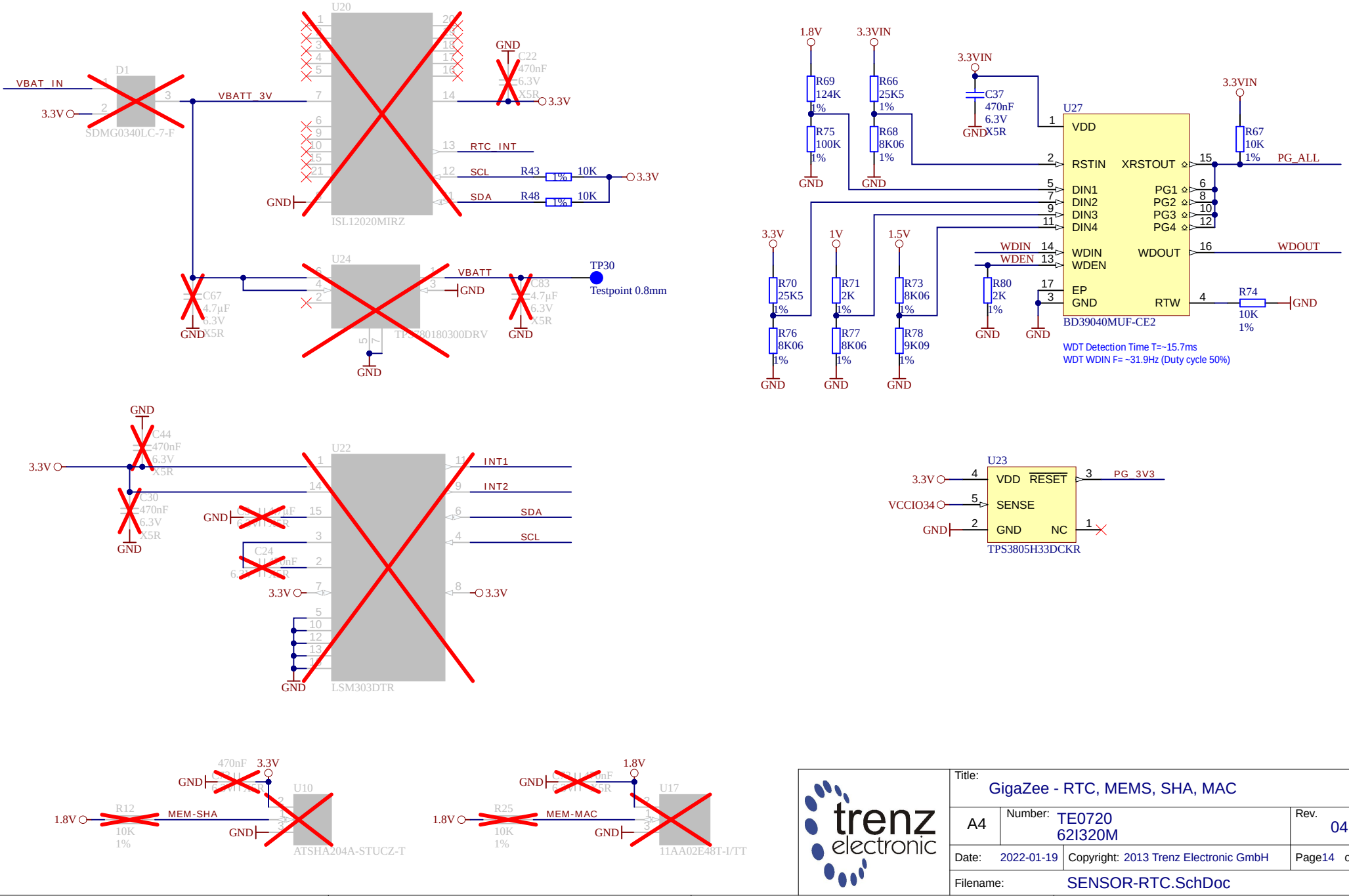

trenz electronic	Title: GigaZee - RTC, MEMS, SHA, MAC		
A4	Number: TE0720 62I320M		Rev. 04
Date: 2022-01-19	Copyright: 2013 Trenz Electronic GmbH		Page14 of 20
Filename: SENSOR-RTC.SchDoc			

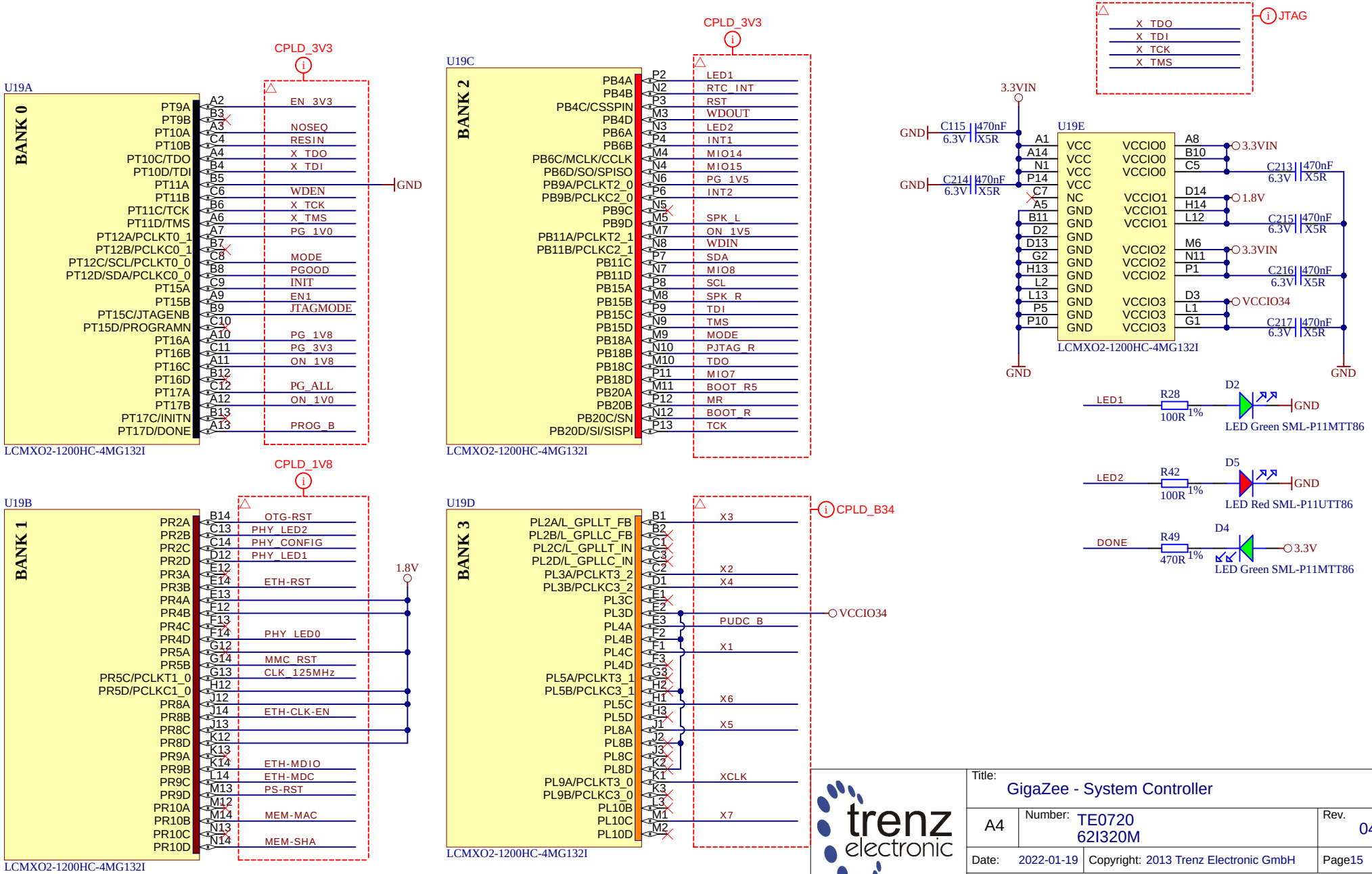

trenz electronic

Title: GigaZee - System Controller			
A4	Number: TE0720 62I320M		Rev. 04
Date: 2022-01-19	Copyright: 2013 Trenz Electronic GmbH		Page15 of 20
Filename: SystemController.SchDoc			

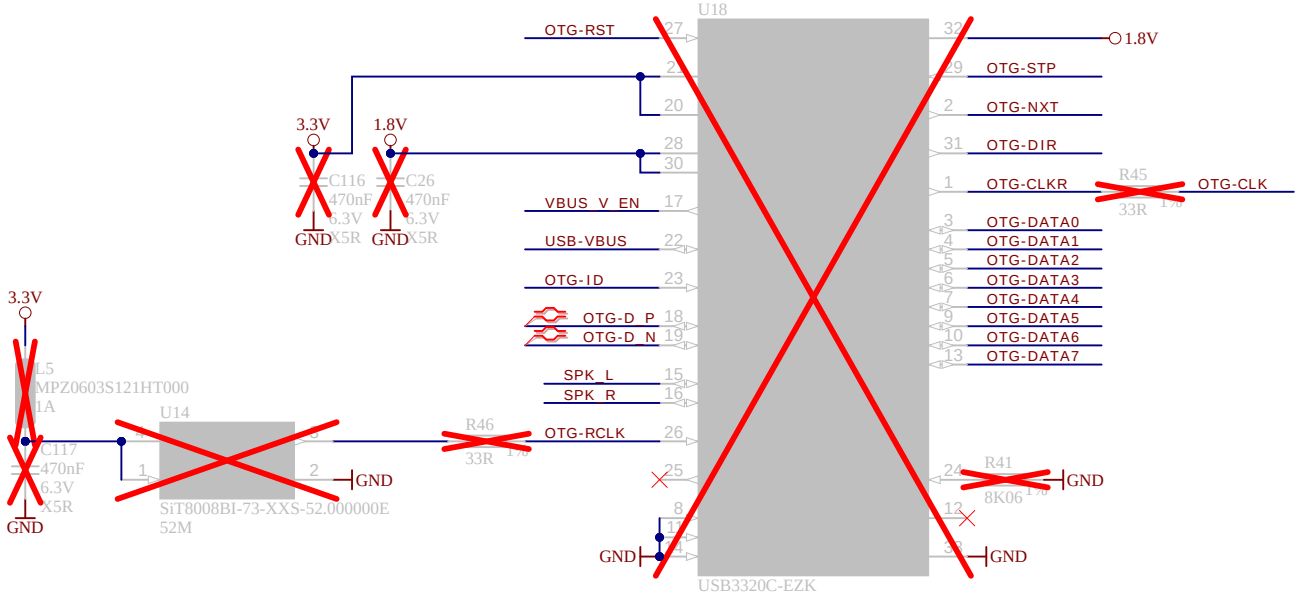

trenz electronic	Title: GigaZee - USB		
A4	Number: TE0720 62I320M		Rev. 04
Date: 2022-01-19	Copyright: 2013 Trenz Electronic GmbH		Page16 of 20
Filename: USB-PHY.SchDoc			

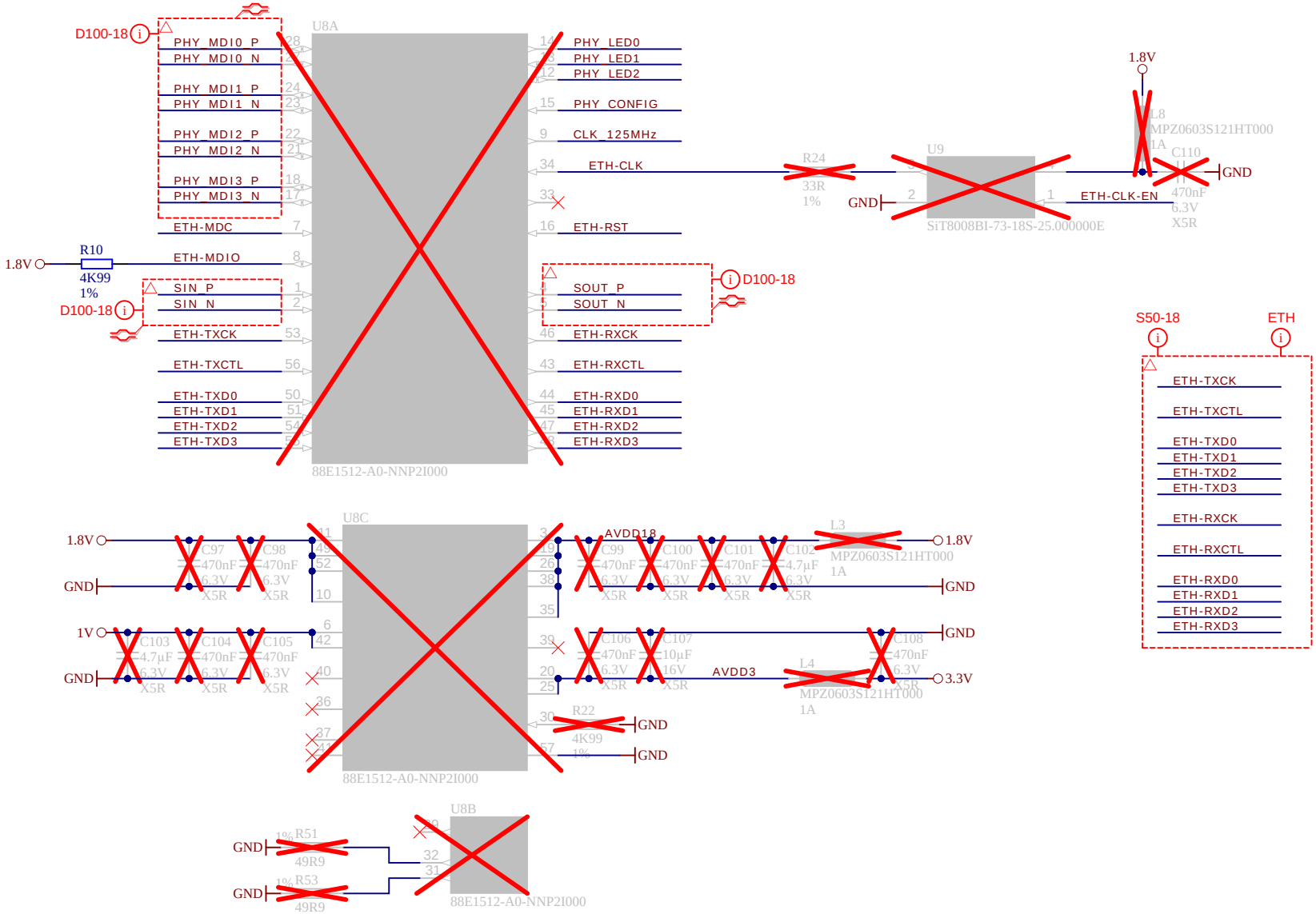

Title: GigaZee - Ethernet			
A4	Number: TE0720 62I320M		Rev. 04
Date: 2022-01-19	Copyright: 2013 Trenz Electronic GmbH		Page17 of 20
Filename: ETH-PHY.SchDoc			

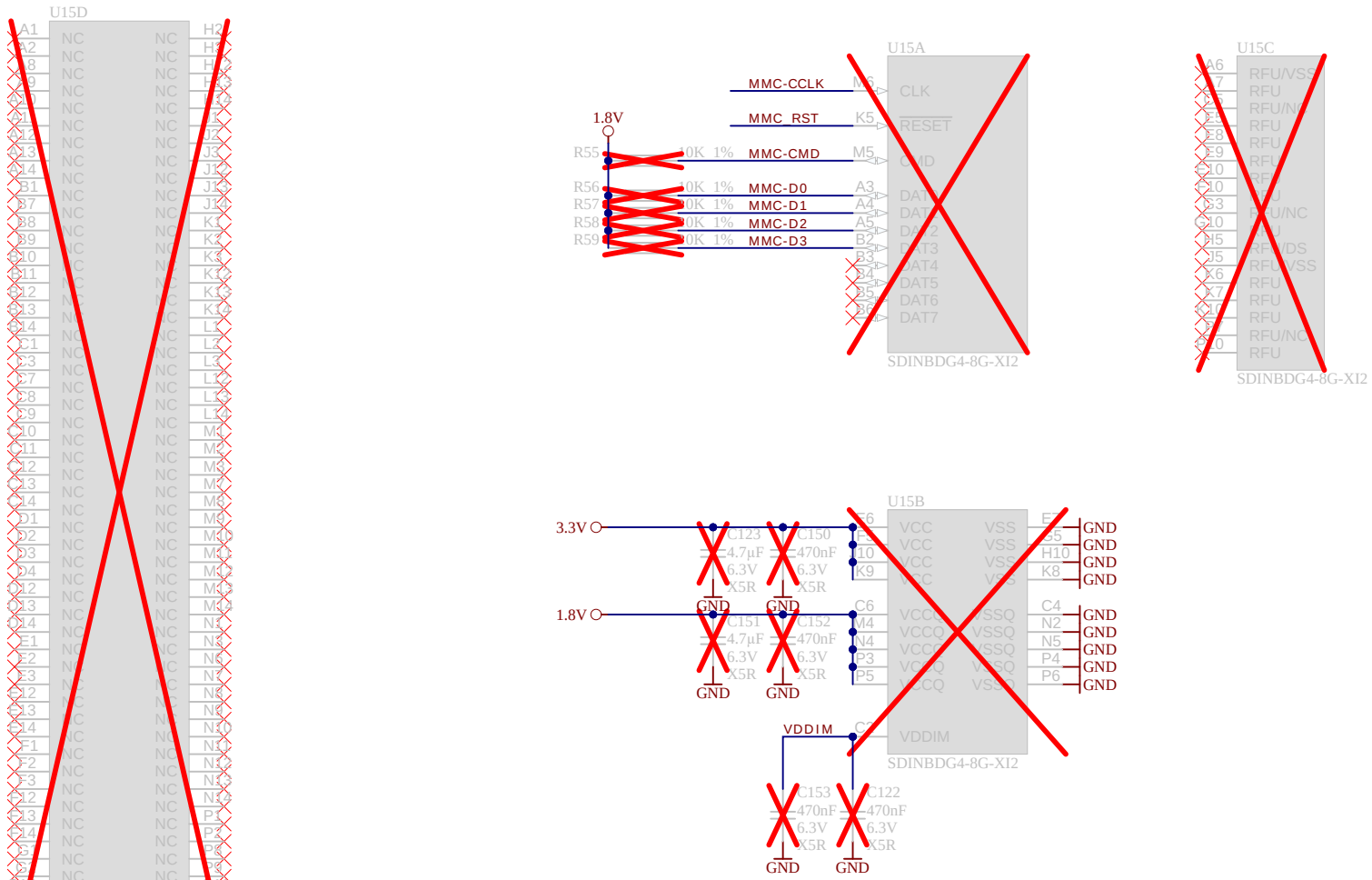

trenz electronic	Title: GigaZee - eNAND		
A4	Number: TE0720 62I320M		Rev. 04
Date: 2022-01-19	Copyright: 2013 Trenz Electronic GmbH		Page18 of 20
Filename: eMMC.SchDoc			

Power-on sequencing:

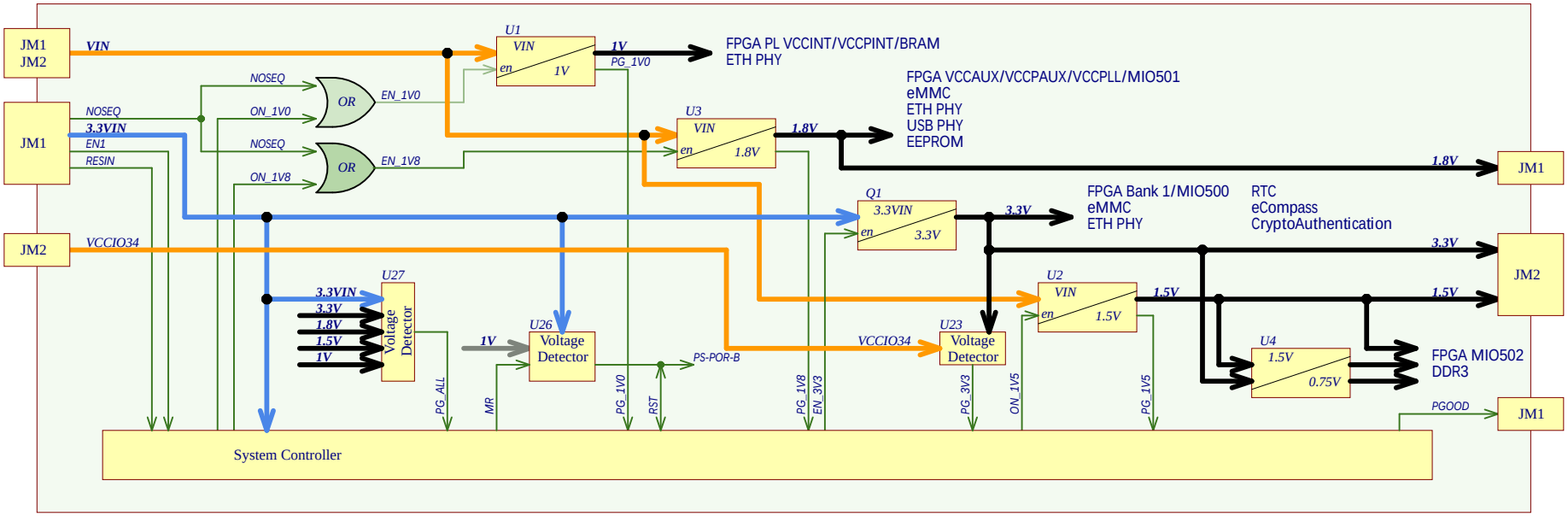

Recommended Operating Conditions

Power Rail	Direction	Range	Tolerance	Description	Note
VIN	IN	3.3 - 5V	+/-5%	Micromodule Power	Mandatory
3.3VIN	IN	3.3V	+/-5%	Micromodule Power	Mandatory
VCCIO13	IN	1.2 - 3.3V	+/-5%	HR IO Bank13	Mandatory
VCCIO33	IN	1.2 - 3.3V	+/-5%	HR IO Bank33	-
VCCIO34	IN	1.2 - 3.3V	+/-5%	HR IO Bank34	Mandatory
VCCIO35	IN	1.2 - 3.3V	+/-5%	HR IO Bank35	-
VBAT_IN	IN	2.5 - 5V	+/-5%	RTC	-
1.8V	OUT	1.8V	+/-5%	For Carrier card Periphery	-
3.3V	OUT	3.3V	+/-5%	For Carrier card Periphery	-
DDR_PWR	OUT	1.5V	+/-5%	For Carrier card Periphery	-
VREF_JTAG	OUT	3.3V	+/-5%	For Carrier card Periphery	Connected to 3.3VIN

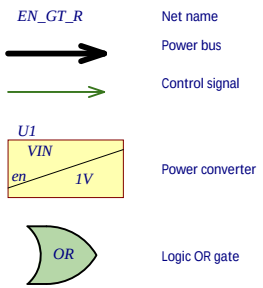

trenz electronic	Title: GigaZee - Power Diagram		
A4	Number: TE0720 62I320M		Rev. 04
Date: 28.10.2022	Copyright: Trenz Electronic GmbH / TT		Page 19 of 20
Filename: Power_Diagram.SchDoc			

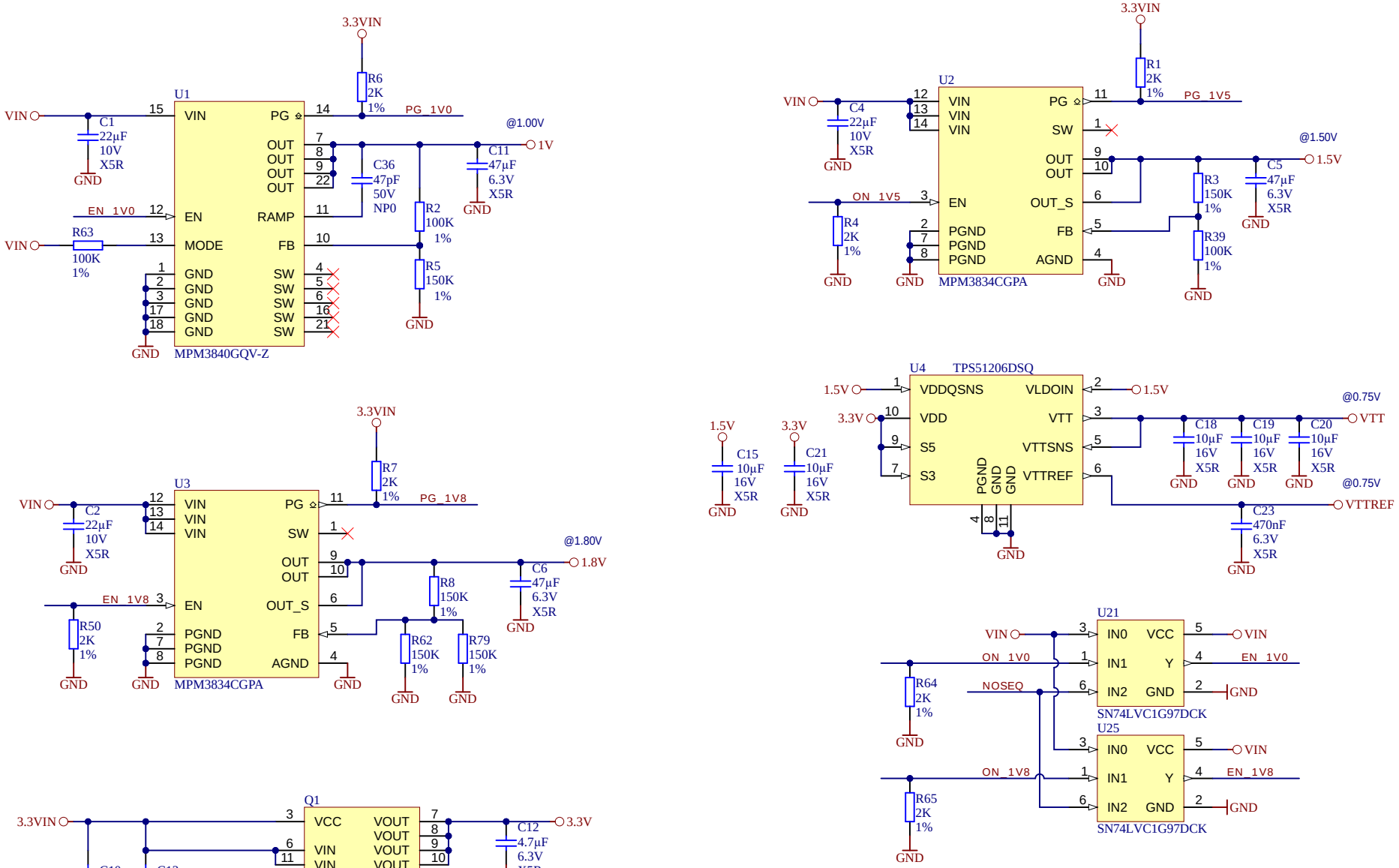

trenz electronic	Title: GigaZee - Power		
A4	Number: TE0720 62I320M		Rev. 04
Date: 2022-01-19	Copyright: 2013 Trenz Electronic GmbH		Page20 of 20
Filename: Power.SchDoc			