TE0865 TRM

Revision v.69

Exported on 2023-10-24

Online version of this document:

https://wiki.trenz-electronic.de/display/PD/TE0865+TRM

1 Table of Contents

2 Table of Figures

3 Table of Tables

4 Overview

The Trenz Electronic TE0865 is a high-performance MPSoC module integrating a Xilinx Zynq UltraScale+ ZU17EG (other assembly options for the FPGA are available), 8 GByte DDR4 SDRAM with ECC on PS, 8 GByte DDR4 SDRAM on PL, 256 MByte Flash memory for configuration and operation, Gigabit Ethernet PHY, and powerful switch-mode power supplies for all on-board voltages. A large number of configurable I/O's is provided via rugged high-speed stacking connections.

The prototype configuration of TE0865 will be available with many configuration options available that you can customize to meet your specific needs.

All parts are at least extended temperature range of 0°C to +85°C. The module operating temperature range depends on customer design and cooling solution. Please contact us for options.

Refer to http://trenz.org/te0865-info for the current online version of this manual and other available documentation.

4.1 Key Features

- **SoC/FPGA**
  - Package: C1760
  - Device: ZU11, ZU17, ZU19*
  - Engine: EG*
  - Speed: -1, -2,*, **
  - Temperature: I, E,*, **
- **RAM/Storage**
  - DDR4 on PS with ECC
    - Data width: 64 bit
    - Size: def. 2GB*
    - Speed: 3200 (MT/s) ***
  - DDR4 on PL
    - Data width: 64 bit
    - Size: def. 2GB*
    - Speed: 3200 (MT/s) ***
  - eMMC
    - Data width: 8 Bit
    - size: def. 8 GB *
  - Dual QSPI boot Flash in dual parallel mode (size depends on assembly version)
    - Data width: 8bit
    - size: def. 64MB *
  - MAC address serial EEPROM with EUI-48™ node identity (Microchip 24AA025E48)
- **On Board**
  - Intel Max 10 FPGA as CPLD
  - 6x MEMS Oscillator
  - Gigabit Ethernet transceiver PHY (Marvell Alaska 88E1512)
  - Hi-speed USB2 ULPI transceiver with full OTG support (Microchip USB3340C)
- **Interface**
  - 96 HD I/Os
  - 240 HP I/Os
  - 4x PS GTR
  - 3x Samtec Accelerate HD B2B connector
  - 21 MIOs
- **Power**
  - 12V input supply voltage
  - Variable Bank IO Power Input

- **Dimension**
  - 7.5 cm x 10 cm
- **Notes**
  - * depends on assembly version
  - ** also non low power assembly options possible
  - *** depends on used U+ Zynq and DDR4 combination

4.2 Block Diagram

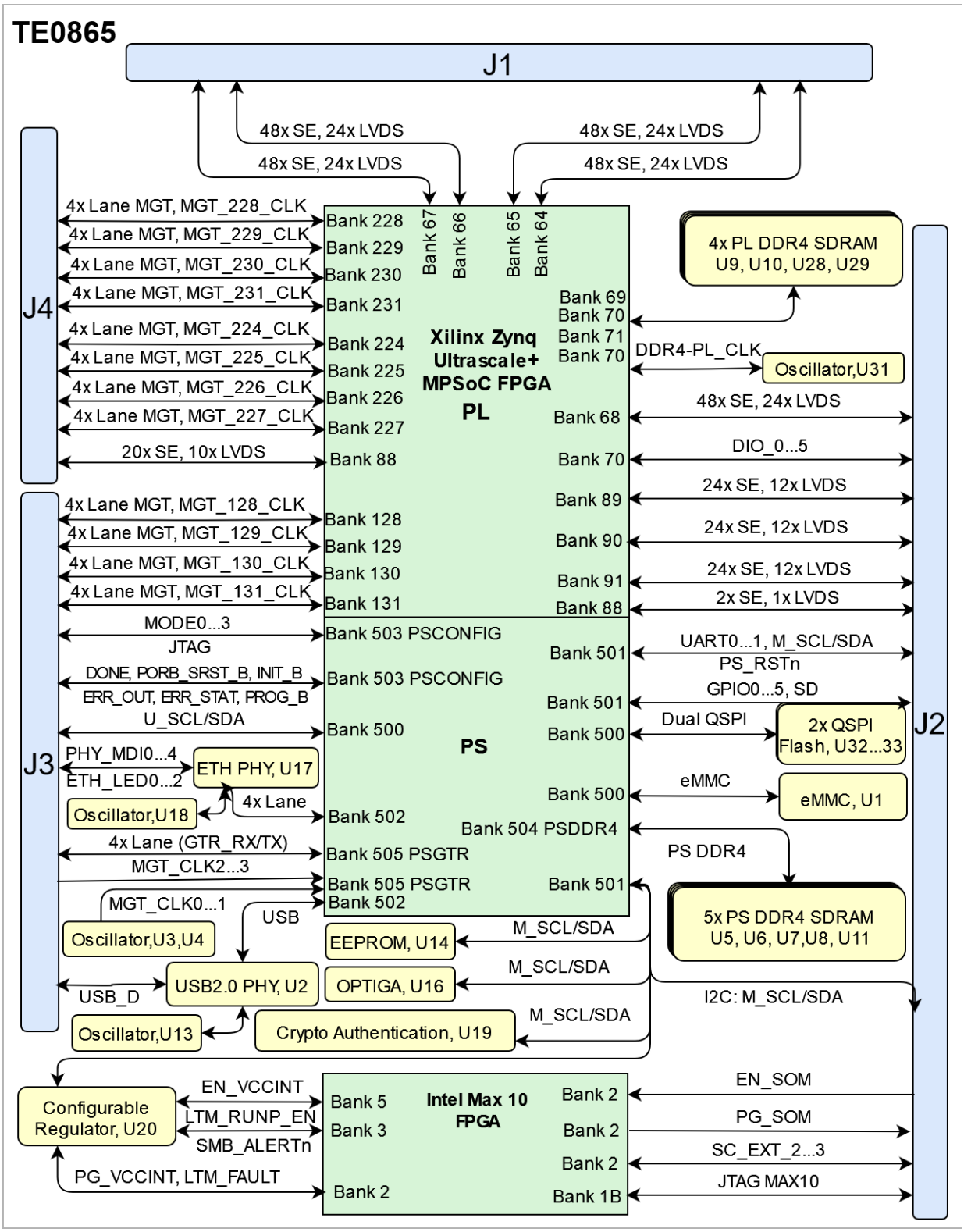

Figure 1: TE0865 block diagram

4.3 Main Components

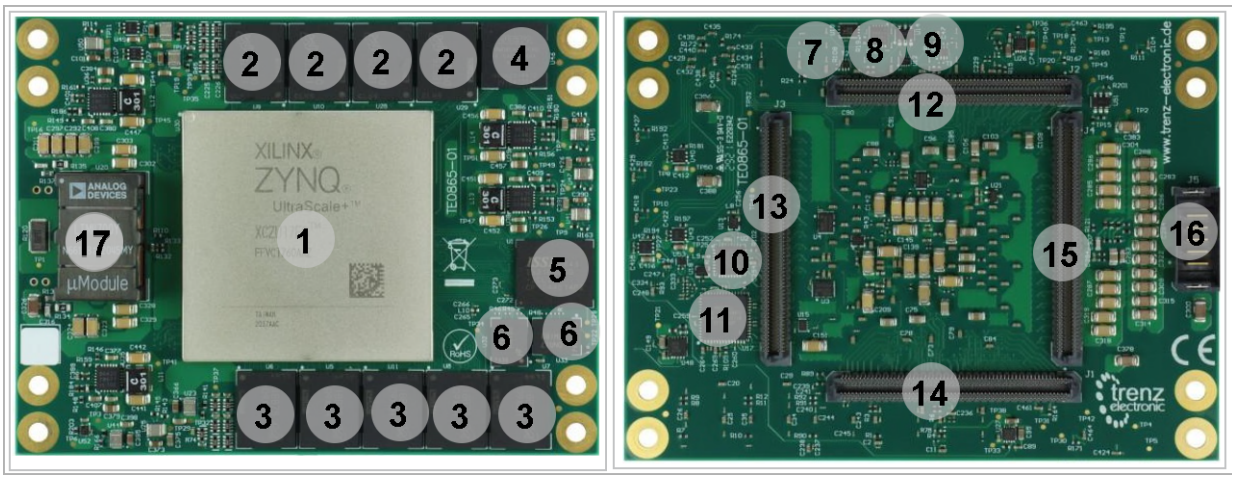

Figure 2: TE0865 main components

1. ZYNQ Ultrascale+ MPSoC FPGA, U30
2. PL DDR4 SDRAM, U9, U10, U28, U29
3. PS DDR4 SDRAM, U5...U8, U11
4. Intel MAX 10 FPGA, U46
5. eMMC RAM, U1
6. Dual QSPI Flash, U32, U33
7. Crypto Authentication IC, U19
8. OPTIGA Trust M Authentication IC, U16
9. EEPROM MAC Address, U14
10. USB2.0 Transceiver, U2
11. Gigabit Ethernet Transceiver, U17
12. B2B Connector, J2
13. B2B Connector, J3
14. B2B Connector, J1
15. B2B Connector, J4
16. Power Terminal, J5
17. Configurable Regulator, U20

4.4 Initial Delivery State

Storage device name	Content	Notes
Quad SPI Flash	Not Programmed	
EEPROM	Programmed	MAC Address
System Controller CPLD	Programmed	Intel MAX 10
PL DDR4 SDRAM	Not Programmed	

Storage device name	Content	Notes
PS DDR4 SDRAM	Not Programmed	
eMMC	Not Programmed	

Table 1: Initial delivery state of programmable devices on the module

4.5 Configuration Signals

Function	Schematic	Connected to	Direction	Description
Boot Mode	MODE0...3	B2B, J3A	Input	
Reset	PERST0	B2B, J1B	Input	
Power Good	PG_SOM	B2B, J2B	Output	
Power Enable	EN_SOM	B2B, J2B	Input	
Manual Reset	MR	B2B, J2B CPLD, U46	Output Output	
Power Signal	PG_+3.3V	B2B, J2B	Output	
Battery Supply	V_BAT	Bank PSCONFIG	Input	
Control Signal	DONE	B2B, J3B	Output	Pull up
Control Signal	POR_B	B2B, J3B	Input	Pull up
Initialization Signal	INIT_B	B2B, J3B	Output	Pull up
Program Signal	PROG_B	B2B, J3B	Output	Pull up
Reset Signal	SRST_B	B2B, J3B	Input	Pull up

Table 2: Controller signal.

5 Signals, Interfaces and Pins

5.1 Board to Board (B2B) I/Os

FPGA bank number and number of I/O signals connected to the B2B connector:

Bank	Type	B2B Connector	I/O Signal Count	Voltage	Notes
64	HP	JM2	48x Single Ended, 24x LVDS Pairs	Variable	Max voltage 1.8V
65	HP	JM2	24x Single Ended, 12x LVDS Pairs	Variable	Max voltage 1.8V
65	HP	JM3	24x Single Ended, 12x LVDS Pairs	Variable	Max voltage 1.8V
66	HP	JM1	48x Single Ended, 24x LVDS Pairs	Variable	Max voltage 1.8V
500	MIO	JM1	26x Single Ended	1.8V	MIO0...25
501	MIO	JM1	6x Single Ended	Variable	Max voltage 3.3V
505	GTR	JM3	16x Single Ended, 8x LVDS Pairs	0.85V	4x Lanes
505	GTR CLK	JM3	2x differential Clock	-	

Table 3: General PL I/O to B2B connectors information
For detailed information about the pin-out, please refer to the Pin-out table[1].

5.2 MGT Lanes

The Xilinx Zynq UltraScale+ device used on the TE0865 module has 4x Lanes MGT transceivers connected to Bank 505 PSGTR. All 4x lanes are wired directly to B2B connector J3B consisting of one transmit and one receive (TX/RX) differential pairs, four signals total per one MGT lane. Furthuremore, MGT clocks are sourced by oscillators U3 and U4 at 27 and 100 MHz respectively.
Following table lists lane number, FPGA bank number, transceiver type, signal schematic name, board-to-board pin connection and FPGA pins connection:

1 https://shop.trenz-electronic.de/Download/?path=Trenz_Electronic/Pinout

Bank	Pin	Signal Name	B2B Pin	Note
505 (PSGTR)	MGT Lane 0	• GTR_RX0_P • GTR_RX0_N • GTR_TX0_P • GTR_TX0_N	• J3B-D39 • J3B-D40 • J3B-C38 • J3B-C39	
	MGT Lane 1	• GTR_RX1_P • GTR_RX1_N • GTR_TX1_P • GTR_TX1_N	• J3B-D36 • J3B-D37 • J3B-C35 • J3B-C36	
	MGT Lane 2	• GTR_RX2_P • GTR_RX2_N • GTR_TX2_P • GTR_TX2_N	• J3B-D33 • J3B-D34 • J3B-C32 • J3B-C33	
	MGT Lane 3	• GTR_RX3_P • GTR_RX3_N • GTR_TX3_P • GTR_TX3_N	• J3B-D30 • J3B-D31 • J3B-C29 • J3B-C30	
	MGT_ CLK0	MGT505_CLK0 (P/N)	Oscillator, U3	27 MHz
	MGT_ CLK1	MGT505_CLK1 (P/N)	Oscillator, U4	100 MHz
	MGT_ CLK2	• MGT505_CLK2_P • MGT505_CLK2_N	• J3A-A29 • J3A-A30	
	MGT_ CLK3	• MGT505_CLK2_P • MGT505_CLK2_N	• J3A-B30 • J3A-B31	

Table 4: MGT Lanes connection

There are 3 clock sources for the GTR transceivers. B505_CLK0 is connected directly to B2B connector JM3, so the clock can be provided by the carrier board. Clocks B505_CLK1 and B505_CLK3 are provided by the on-board clock generator (U10). As there are no capacitive coupling of the data and clock lines that are connected to the connectors, these may be required on the user's PCB depending on the application.JTAG Interface

JTAG access to the UltraScale+ MPsoC FPGA through B2B connector J3B.

JTAG Signal	B2B Connector
TMS	J3B- D59

JTAG Signal	B2B Connector
TDI	J3B- D57
TDO	J3B- D58
TCK	J3B- D56

Table 5: JTAG pins connection
JTAG access to the system controller CPLD, Intel MAX10 FPGA(U46) through B2B connector J2B.

JTAG Signal	B2B Connector
TCK_MAX10	J2B- D56
TMS_MAX10	J2B- D57
TDO_MAX10	J2B- D58
TDI_MAX10	J2B- D59
JTAGEN	Pulled Up

Table 6: JTAG pins connection

5.3 I2C Addresses

I2C Address	Designator	Notes
0x53	U14	EEPROM
0x30	U16	OPTIGA Trust M
0x4E	U20	Configurable Regulator

Table 7: I2C addresses

5.4 MIO Pins

MIO Pin	Connected to	Notes
MIO0...5	QSPI Flash, U32	
MIO6...11	QSPI, Flash, U33	
MIO13...22	eMMC, U1	
MIO23	B2B, J2A	U_INIT
MIO24...25	B2B, J3B	I^2C via Voltage Transform, U15
MIO26...27	B2B, J2A	UART0_RX
MIO28...29	B2B, J2A	UART1_RX
MIO30...31	B2B, J2A	I^2C via Voltage Transform, U12
MIO32...37	B2B, J2A	GPIO0...5
MIO38	B2B, J2A	M_INIT
MIO39...42	B2B, J2B	SD
MIO43	B2B, J2A	PS_RSTn
MIO44...51	B2B, J2A	SD
MIO52...63	USB2.0, U2	USB2.0
MIO64...77	ETH PHY, U17	ETH PHY

Table 8: MIOs pins

5.5 Test Points

Test Point	Signal	Notes
TP1...2	+12.0V	
TP3...4	+3.3V	
TP5...6	+3.3V_SW	
TP7...8	+2.3V	
TP9...10	+1.8V	
TP11...12	+1.8V_AUX	
TP13...14	+1.8V_VCCADC	
TP15...16	+0.85V_VCCINT	
TP17...18	+1.2V_PL_DDR	
TP19...20	+2.5V_PL_DDR	
TP21...22	+0.85V_GTR_AVCC_PS	
TP23...24	+1.8V_GTR_AVTT_PS	
TP25...26	+1.8V_AUX_PS	
TP27...28	+1.2V_PLL_PS	
TP29...30	+1.2V_PS_DDR	
TP31...32	+2.5V_PS_DDR	
TP33...34	VREFA_DDR_PS	
TP35...36	VREFA_DDR_PL	

Test Point	Signal	Notes
TP37...38	VTT_DDR_PS	
TP39...40	VTT_DDR_PL	
TP41...42	+0.9V_GTH_AVCC	
TP43...44	+1.8V_GTH_AUX	
TP45...46	+1.2V_GTH_AVTT	
TP47...48	+0.9V_GTY_AVCC	
TP49...50	+1.8V_GTY_AUX	
TP51...52	+1.2V_GTY_AVTT	

Table 9: Test Points Information

6 On-board Peripherals

Chip/Interface	Designator	Notes
Intel MAX 10 CPLD (see page 18)	U46	
PL DDR4 SDRAM (see page 26)	U9, U10, U28, U29	
PS DDR4 SDRAM (see page 27)	U5...U8, U11	
Dual QSPI Flash (see page 22)	U32, U33	
eMMC Memory (see page 22)	U1	
USB2.0 Transceiver (see page 24)	U2	
Gigabit Ethernet Transceiver (see page 23)	U17	
EEPROM (see page 25)	U14	
Crypto Authentication (see page 26)	U19	
OPTIGA Authentication (see page 26)	U16	
MEMS Oscillator (see page 27)	U3, U4, U13, U18, U31, U34	

Table 10: On board peripherals

6.1 System Controller CPLD

The TE0865 is equipped with an Intel MAX 10 as System Controller CPLD (U46). Please check further information in the TE0865 CPLD page.

Bank	Schematic	Connectced to	Notes
Bank 1A	VCCIO1A	3.3V	
Bank 1B	TCK_MAX10	B2B, J2B	

Bank	Schematic	Connectced to	Notes
	TMS_MAX10	B2B, J2B	
	TDO_MAX10	B2B, J2B	
	TDI_MAX10	B2B, J2B	
	VCCIO1B	3.3V	
Bank 2	EN_VTT_DDR_PL	Regulator, U26	
	EN_+2.5V_PL_DDR	Regulator, U22	Enable Power DDR4 PL
	EN_+1.2V_PL_DDR	Regulator, U24	Enable Power DDR4 PL
	PG_+1.2V_PL_DDR	Regulator, U24	Power Good DDR4 PL
	EN_+1.8V_AUX_PS	Regulator, U43	
	EN_SOM	B2B, J2B	Main 'Power Enable' signal
	PG_SOM	B2B, J2B	Main 'Power Good' signal
	SC_EXT_2...3	B2B, J2B	
	PG_VCCINT	Regulator, U20	Configurable Regulator
	LTM_FAULT	Regulator, U20	Configurable Regulator
	MR	B2B, J2B Regulator, U51	
Bank 3	SMB_ALERTn	Regulator, U20	Configurable Regulator
	PG_+2.5V_PL_DDR	Regulator, U22	Power Good DDR4 PL
	LTM_RUNP_EN	Regulator, U20	Configurable Regulator

Bank	Schematic	Connectced to	Notes
	M_SDA	I^2C Bus	B2B, J2A via level shifter (U12)
	M_SCL	I^2C Bus	B2B, J2A via level shifter (U12)
	RST_SYSn	Diod, U53B	Reset
	EN_+0.9V_GTH_AVCC	Regulator, U35	
	EN_+0.9V_GTY_AVCC	Regulator, U38	
	PG_+1.2V_PS_DDR	Regulator, U25	Power Good DDR4 PS
	PG_+0.9V_GTH_AVCC	Regulator, U35	
	PG_+0.9V_GTY_AVCC	Regulator, U38	
	EN_+3.3V_SW	Regulator, U52	Secondary Power
	EN_+1.2V_PLL_PS	Regulator, U42	
	PG_+1.8V_GTR_AVTT_PS	Regulator, U47	
	PG_+1.8V	Regulator, U41	
	EN_+2.5V_PS_DDR	Regulator, U23	Enable Power DDR4 PS
	PG_+1.2V_GTY_AVTT	Regulator, U39	
	EN_+1.2V_GTY_AVTT	Regulator, U39	
	M_INT	B2B, J2A	
	EN_+1.8V_VCCADC	Regulator, U49	
	PG_+0.85V_GTR_AVCC_PS	Regulator, U48	

Bank	Schematic	Connectced to	Notes
	EN_VTT_DDR_PS	Regulator, U27	
	EN_+1.8V	Regulator, U41	
	EN_+1.8V_GTY_AUX	Regulator, U40	
	PG_+2.3V	Regulator, U45	
Bank 6	VCCIO6	3.3V	
Bank 5	EN_+1.8V_GTR_AVTT_PS	Regulator, U47	
	EN_+1.8V_GTH_AUX	Regulator, U37	
	EN_+1.8V_AUX	Regulator, U50	
	EN_+1.2V_GTH_AVTT	Regulator, 36	
	PG_+1.2V_GTH_AVTT	regulator, U36	
	+3.3V_SW	eMMC, U1	
	EN_+1.2V_PS_DDR	Regulator, U25	Power Good DDR4 PS
	EN_+0.85V_GTR_AVCC_PS	Regulator, U48	
	PG_+1.2V_GTH_AVTT	Regulator, U48	
	EN_VCCINT	Regulator, U20	
	EN_+2.3V	Regulator, U45	
	PG_+1.8V_AUX	Regulator, U50	
	PG_+2.5V_PS_DDR	Regulator, U23	Power Good DDR4 PS

Table 11: CPLD pin connections

6.2 Dual QSPI Flash Memory

The TE0865 is equipped with dual 128 Mb (256 Mb) QSPI flash memory, U32 and U33 for configuration and operation storage.

Designator	Pin	Schematic	Notes
U32	CLK	MIO0	
	DI/IO0	MIO4	
	DO/IO1	MIO1	
	nWP/IO2	MIO2	
	nHOLD/IO3	MIO3	
	nCS	MIO5	
U33	CLK	MIO12	
	DI/IO0	MIO8	
	DO/IO1	MIO9	
	nWP/IO2	MIO10	
	nHOLD/IO3	MIO11	
	nCS	MIO7	

Table 12: Quad SPI interface MIOs and pins

6.3 eMMC Memory

The TE0865 is equipped with an eMMC Flash memory IC(U1) connected to the PS MIO pins MIO13..MIO22.

Designator	Pin	Schematic	Connected to	Notes
U32	CLK	MMC-CCLK	MIO22	

Designator	Pin	Schematic	Connected to	Notes
	nRESET	RST_PERn	-	PS_RSTn, PS_SYSn
	CMD	MMC-CMD	MIO21	
	DAT0...7	MMCD0...7	MIO13...20	

Table 13: eMMC connections

6.4 Gigabit Ethernet

On-board Gigabit Ethernet PHY (U17) is provided with Marvell Alaska 88E1512 IC (U17). The Ethernet PHY RGMII interface is connected to the ZynqMP Ethernet3 PS GEM3. I/O voltage is fixed at 1.8V for HSTL signaling. The reference clock input of the ETH is supplied from an on-board 25.00 MHz oscillator (U18).

Pin	Schematic	Connected to	Note
MDIP0...3	PHY_MDI0...3	B2B, J3A	
MDC	ETH_MDC	MIO76	
MDIO	ETH_MDIO	MIO77	
S_IN	S_IN	N.C	
S_OUT	S_OUT	N.C	
TXD0..3	ETH_TXD0...3	MIO65...68	
TX_CTRL	ETH_TXCTL	MIO69	
TX_CLK	ETH_TXCK	MIO64	
RXD0...3	ETH_RXD0...3	MIO71...74	
RX_CTRL	ETH_RXCTL	MIO75	
RX_CLK	ETH_RXCK	MIO70	

Pin	Schematic	Connected to	Note
LED1	PHY_LED1	B2B, J3A	
RESETn	ETH_RST	MIO24	
XTAL_IN	ETH_CLK	Oscillator, U18	Input Clock of ETH Transciever
nRESET	RST_PERn	B2B, J2A	PS_RSTn, PS_SYSn

Table 14: GigaBit Ethernet connection

6.5 USB2.0 Transceiver

Hi-speed USB2.0 transceiver (U2) is provided with USB3340 from Microchip. The transceiver is connected to the PS MIO via MIO52..63. The I/O voltage is fixed at 3.3V (VBAT) and PHY reference clock input is supplied from the on-board 24.00 MHz oscillator (U13).

Pin	Schematic	MIO	B2B Name	Notes
RESETB	RST_PERn	-		RST_PERn
VBAT	VBAT	-		3.3V
CPEN	USB_CPEN	-	B2B, J3A	
VBUS	USB_VBUS	-	B2B, J3A	
ID	USB_ID	-	B2B, J3A	
DP, DM	USB_DP USB_DM	-	B2B, J3A	

Pin	Schematic	MIO	B2B Name	Notes
REFCLK	USB_CLK24_PHY	-	-	24.00MHz from on-board oscillator (U13).
REFSEL[0..2]	-	-	-	Reference clock frequency select, all set to 1.8V selects 24 MHz.
DATA0...7	USB_DATA0...7	MIO 56,57,54, 59...62	-	USB Data
STP	USB_STP	MIO58	-	
NXT	USB_NXT	MIO55	-	
DI	USB_DI	MIO53	-	
CLKOUT	USB_CLKOUT	MIO52	-	

Table 15: General overview of the USB PHY signals

6.6 EEPROM

There is an EEPROM (U14) provided on the module TE0865 for storing MAC Address. The EEPROM has the I^2C bus address 0x53.

MIO Pin	Schematic	U25 Pin	Notes
MIO39	I2C_SDA	SDA	
MIO38	I2C_SCL	SCL	

Table 16: I2C EEPROM interface MIOs and pins

6.7 Crypto Authentication

The TE0865 is equipped with an authentication IC, ATECC608A (U19) which includes an EEPROM array for storage of up to 16 keys, certificates, miscellaneous read/write, read-only or secret data, consumption logging, and security configurations. Access to the various sections of memory can be restricted in a variety of ways and then the configuration can be locked to prevent changes.

Pin	Schematic	Connected to	Notes
SDA	M_SDA	B2B, J2A	M_SDA_PS
SCL	M_SDA	B2B, J2A	M_SCL_PS

Table 17: Crypto Authentication connection

6.8 OPTIGA Authentication

The TE0865 is equipped with an OPTIGA Trust M IC, SLS32AIA010MH (U16). The OPTIGA Trust M comes with up to 10kB of user memory that can be used to store X.509 certificates and data. OPTIGA Trust M is based on Common Criteria (CC) Certified EAL6+ (high) hardware enabling it to prevent physical attacks on the device itself and providing high assurance that the keys or arbitrary data stored cannot be accessed by an unauthorized entity. The OPTIGA Trust M is connected via I^2C with address of 0x30.

Pin	Schematic	Connected to	Notes
SDA	M_SDA	B2B, J2A	
SCL	M_SDA	B2B, J2A	
RST	RST_SECn	B2B, J2A	PS_RSTn

Table 18: OPTIGA Authentication connection

6.9 PL DDR4 SDRAM

The TE0865 SoM has four 2GB volatile DDR4 SDRAM ICs connected to Programmable Logic(PL) for operations, storing and streaming data.

- Part number: MT40A1G16RC-062E
- Supply voltage: 1.2V
- Speed: 3200 MT/s
- Temperature: -40 ~ 95 °C

6.10 PS DDR4 SDRAM

The TE0865 SoM has five 2GB volatile DDR4 SDRAM ICs connected to Processing System (PS) for operations, storing and streaming data.

- Part number: MT40A1G16RC-062E
- Supply voltage: 1.2V
- Speed: 3200 MT/s
- Temperature: -40 ~ 95 °C

6.11 Clock Sources

Designator	Description	Frequency	Note
U3	MEMS Oscillator	27 MHz	MGT_CLK0
U4	MEMS Oscillator	100 MHz	MGT_CLK1
U13	MEMS Oscillator	24 MHz	USB_CLK
U18	MEMS Oscillator	25 MHz	ETH_CLK
U31	MEMS Oscillator	200 MHz	DDR4 Clock
U34	MEMS Oscillator	33.33 MHz	PS REF CLK

Table 19: Osillators

7 Power and Power-On Sequence

7.1 Power Supply

Power supply with minimum current capability of 3.0 A for system startup is recommended.

7.2 Power Consumption

Power Input Pin	Typical Current
VIN	TBD*

Table 20: Power Consumption
* TBD - To Be Determined

7.3 Power Distribution Dependencies

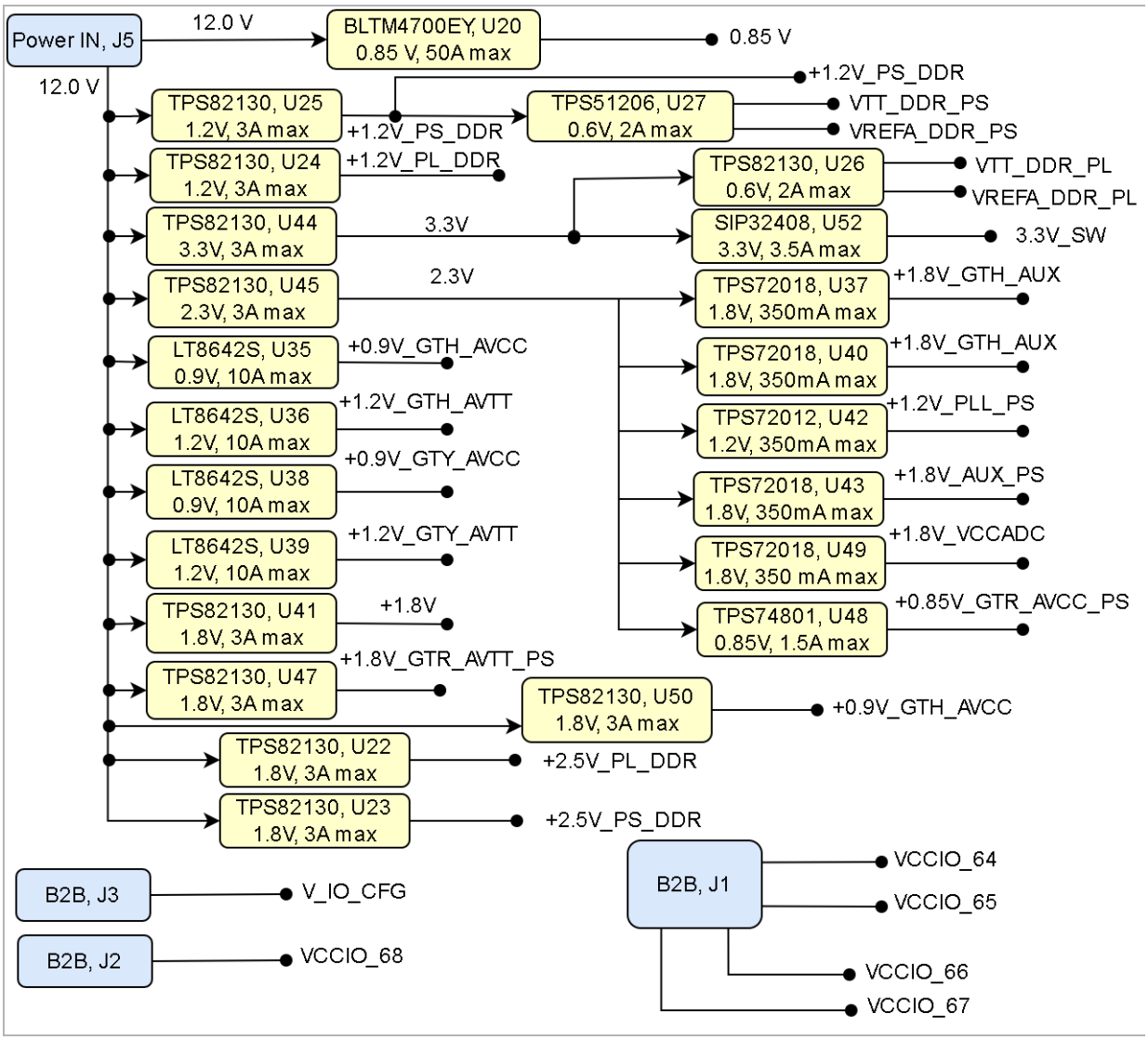

Figure 3: Power Distribution

7.4 Power-On Sequence

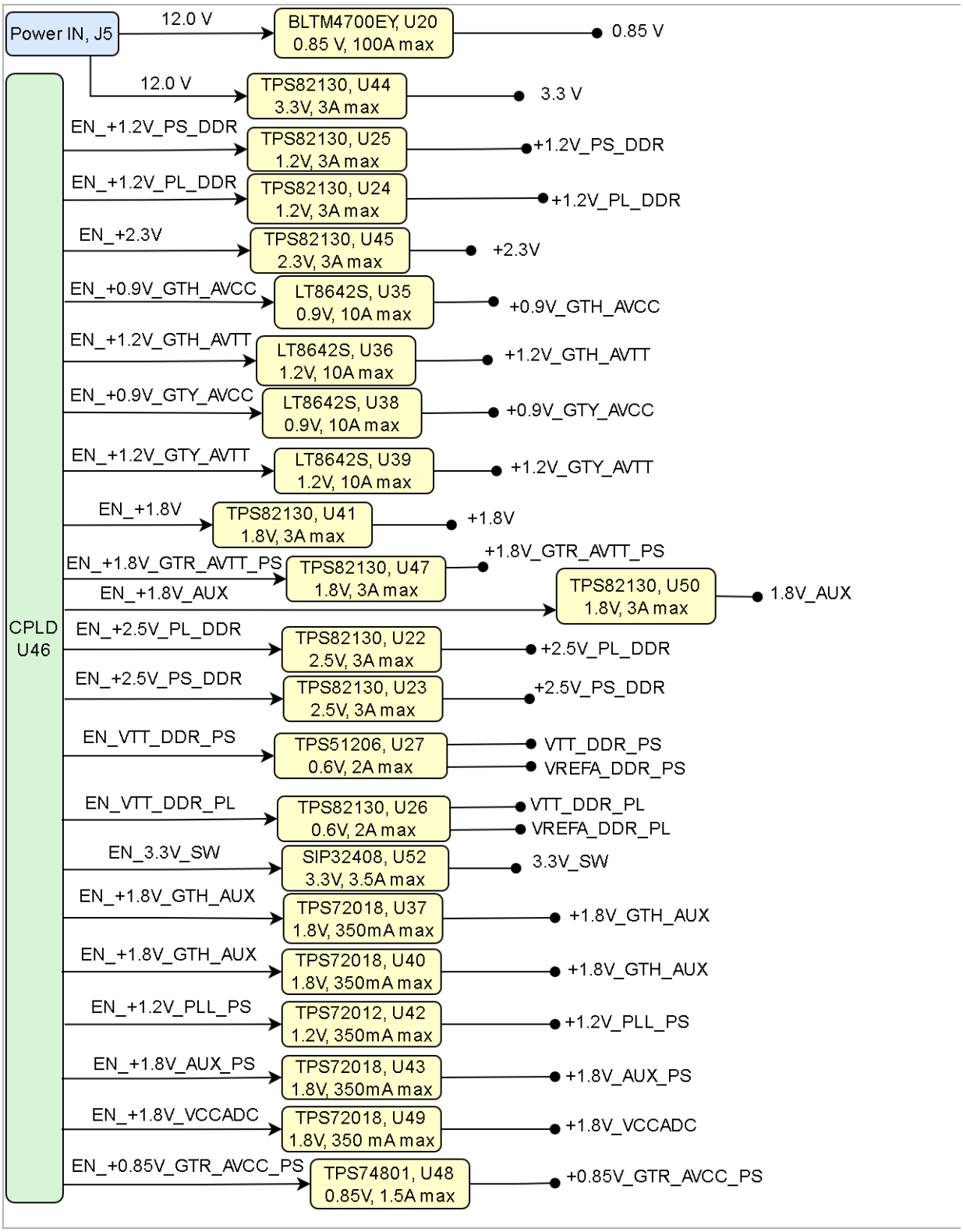

Figure 4: Power Sequency

7.5 Voltage Monitor Circuit

The LTM4700 (U20) is a dual 50A or single 100A step-down µModule(power module) DC/DC regulator featuring remote configurability and telemetry-monitoring of power management parameters over standard I2C-based digital interface protocol.

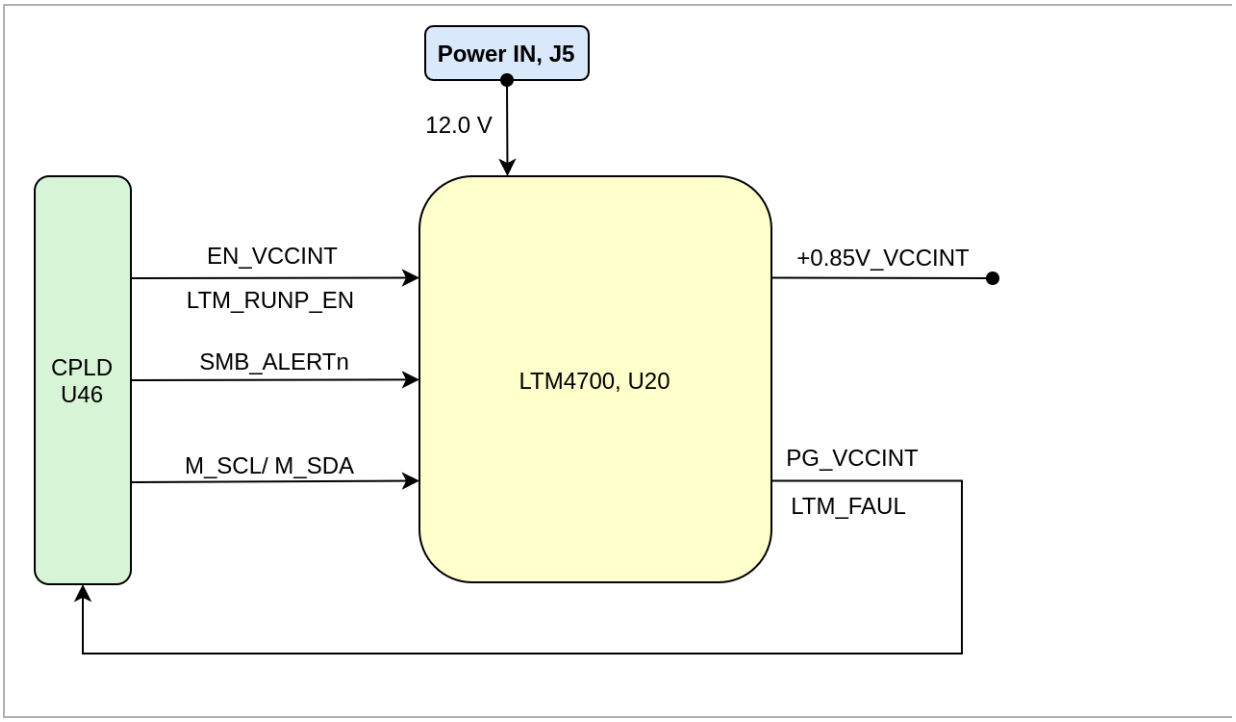

Figure 5: Voltage Monitor Circuit

7.6 Power Rails

Power Rail Name	B2B J1 Pin	B2B J2 Pin	B2B J3 Pin	B2B J4 Pin	Direction	Notes
VCCIO_67	D10	-	-	-	In	
VCCIO_66	D20	-	-	-	In	
VCCIO_64	D35	-	-	-	In	
VCCIO_65	D45	-	-	-	In	
VCCIO_91	-	A6,	-	-	In	
VCCIO_90	-	B10	-	-	In	

Power Rail Name	B2B J1 Pin	B2B J2 Pin	B2B J3 Pin	B2B J4 Pin	Direction	Notes
VCCIO_89	-	A21	-	-	In	
V_IO_CFG	-	A45	-	-	In	
+1.2V_PL_DDR	-	B44	-	-	Out	
VCCIO_68	-	C29	-	-	In	
VCCIO_88	-	D44	-	-	In	
+3.3V	-	D60	-	-	Out	
+1.8V	-		D60	-	Out	

Table 21: Module power rails.

7.7 Bank Voltages

Bank	Schematic Name	Voltage	Notes
64 HP	VCCIO_64	max 1.8 V	
65 HP	VCCIO_65	max 1.8 V	
66 HP	VCCIO_66	max 1.8 V	
67 HP	VCCIO_67	max 1.8 V	
68 HP	VCCIO_68	max 1.8 V	
69 HP	VCCIO_69	1.2 V	
70 HP	VCCIO_70	1.2 V	
71 HP	VCCIO_71	1.2 V	

Bank	Schematic Name	Voltage	Notes
88 HD	VCCIO_88	max 3.3V	ZU17 Bank 90 HD
89 HD	VCCIO_88	max 3.3 V	ZU17 Bank 91 HD
90 HD	VCCIO_88	max 3.3V	ZU17 Bank 93 HD
91 HD	VCCIO_88	max 3.3V	ZU17 Bank 94 HD
128 GTY	MGTAVCC_L	0.9 V	
129 GTY	MGTAVCC_L	0.9 V	
224 GTH	MGTAVCC_RS	0.9 V	
225 GTH	MGTAVCC_RS	0.9 V	
228 GTH	MGTAVCC_RN	0.9 V	
229 GTH	MGTAVCC_RN	0.9 V	
500 PSMIO	VCCO_PSIO0_500	1.8 V	
501 PSMIO	VCCO_PSIO0_501	max 3.3 V	
502 PSMIO	VCCO_PSIO0_502	1.8 V	
504 PSDDR	VCCO_PSDDR_504	1.2 V	

Bank	Schematic Name	Voltage	Notes
505 PSGTR	PS_MGTRAVCC	0.85 V	

Table 22: Zynq SoC bank voltages.

8 Board to Board Connectors

The 7.5 x 10 cm modules use four Samtec AcceleRate HD High-Density on the bottom side.

- 4 x ADM6-60-01.5-L-4-2 (compatible to ADF6-60-01.5-L-4-2), (240 pins, "60" per row)

The carriers for 7.5 x 10 cm modules use four Samtec AcceleRate HD High-Density on the bottom side.

- 4 x ADF6-60-03.5-L-4-2 (compatible to ADF6-60-01.5-L-4-2), (240 pins, "60" per row)

8.1 Features

- Board-to-Board Connector 240-pins, 60 contacts per row
- 0.025" (0.635 mm) pitch
- Data Rate: max 56 Gbps
- Mates with: ADM6/APF6
- Insulator Material: LCP, Black
- Contact Material: Copper Alloy
- Plating: Au or Sn over 50 µ" (1.27 µm) N
- Operating Temperature Range: -55 °C to +125 °C
- • PCIe 5.0 capable: Yes
- Lead-Free Solderable: Yes
- RoHS Compliant: Yes

8.2 Connector Mating height

When using the same type on baseboard, the mating height is 5mm. Other mating heights are possible by using connectors with a different height

Order number	Connector on baseboard	compatible to	Mating height
30095	REF-30095	ADM6-60-01.5-L-4-2	5 mm
31137	REF-31137	ADF6-60-03.5-L-4-2	5 mm

Table 23: Connectors.
The module can be manufactured using other connectors upon request.

8.3 Connector Speed Ratings

The AcceleRate HD High-Density connector speed rating depends on the stacking height; please see the following table:

Stacking height	Speed rating
5 mm	10/ 25/ 56 Gbps

Table 24: Speed rating.

8.4 Current Rating

Current rating of Samtec AcceleRate HD High-Density B2B connectors is 1.34 A per pin (4 pins powered)

8.5 Connector Mechanical Ratings

- Shock: 100G, 6 ms Sine
- Vibration: 7.5G random, 2 hours per axis, 3 axes total

9 Technical Specifications

9.1 Absolute Maximum Ratings

Symbols	Description	Min	Max	Unit	Note
VCCR	Input Supply Voltage	5.75	16	V	B2B, J5
V_IO_CFG	Config Voltage	-0.5	3.4	V	B2B,J3
VCCIO_64	Bank 64 Supply Voltage	-0.5	2	V	B2B,J1
VCCIO_65	Bank 65 Supply Voltage	-0.5	2	V	B2B,J1
VCCIO_66	Bank 66 Supply Voltage	-0.5	2	V	B2B,J1
VCCIO_67	Bank 67 Supply Voltage	-0.5	2	V	B2B,J1
VCCIO_68	Bank 68 Supply Voltage	-0.5	2	V	B2B,J2
T_STG	Storage Temperature	-40	85	°C	

Table 25: PS absolute maximum ratings

9.2 Recommended Operating Conditions

Operating temperature range depends also on customer design and cooling solution. Please contact us for options.

Parameter	Min	Max	Units	Reference Document
VCCR	11.5	12.5	V	See LTM4700 (U20) datasheet.
V_IO_CFG	1.14	3.4	V	
VCCIO_64	0.95	1.9	V	
VCCIO_65	0.95	1.9	V	
VCCIO_66	0.95	1.9	V	

Parameter	Min	Max	Units	Reference Document
VCCIO_67	0.95	1.9	V	
VCCIO_68	0.95	1.9	V	
T_OPT	0	85	°C	See components datasheet

Table 26: Recommended operating conditions.

Components are mainly classified in 3 temperature groups, according to range specifications: commercial: 0°C - 75°C extended: 0°C - 85°C industrial: -40°C - 85°C

Classification of the module can be locked up here: Article Number Information[2] i.e.: TE0803-03-5D"I"21-AS (The I indicates industrial)

The actual operation temperature range depends on the FPGA/SoC design/utilization and cooling, as well as other variables. Please note: These are only indications!

9.3 Physical Dimensions

- Module size: 75 mm × 100 mm. Please download the assembly diagram for exact numbers.
- Mating height with standard connectors: 5 mm.

PCB thickness: 2 mm.

2 https://wiki.trenz-electronic.de/display/PD/Article+Number+Information

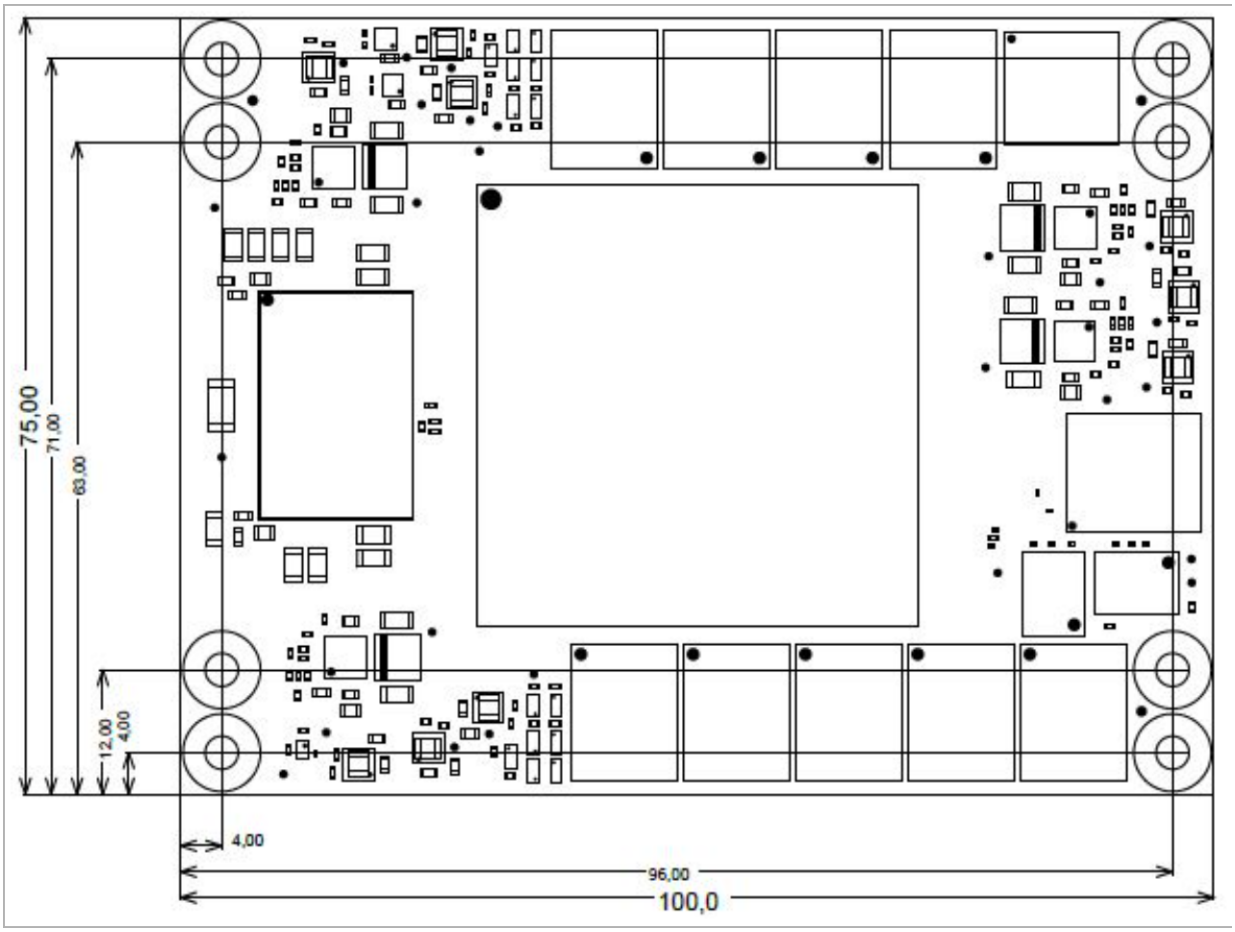

Figure 6: Physical Dimension

10 Currently Offered Variants

Trenz shop TE0865 overview page	
English page[3]	German page[4]

Table 27: Trenz Electronic Shop Overview

3 https://shop.trenz-electronic.de/en/search?sSearch=TE0865
4 https://shop.trenz-electronic.de/de/search?sSearch=TE0865

11 Revision History

11.1 Hardware Revision History

Figure 7: Board hardware revision number.

Date	Revision	Changes	Documentation Link
2021-04-15	REV01	Initial Release	REV01[5]
2021-10-21	REV02	• Improved PCB trace to simplify production with increased reliability • All pull down resistors on DCDC enable inputs changed to 1K	REV02[6]

Table 28: Hardware Revision History
Hardware revision number can be found on the PCB board together with the module model number separated by the dash.

11.2 Document Change History

Date	Revision	Contributor	Description
2023-10-24	v.69 (see page 6)	John Hartfiel[7]	• Correction Overview Picture GTH B2B connection
2023-07-05	v.68	Vadim Yunitski	• Updated table "CPLD Pin Connections": added signals EN_SOM and PG_SOM; SC_EXT_1 and SC_EXT_4 removed. • Updated table "Controller signals": PG_VCCINT and EN_VCCINT replaced by PG_SOM

5 https://shop.trenz-electronic.de/en/TE0865-02-ABI21MA-MPSoC-Module-with-Zynq-UltraScale-ZU11EG-1I-4-GB-DDR4-PS-4-GB-DDR4-PL?path=Trenz_Electronic/Modules_and_Module_Carriers/7.5x10/TE0865/REV01/Documents
6 https://shop.trenz-electronic.de/en/TE0865-02-ABI21MA-MPSoC-Module-with-Zynq-UltraScale-ZU11EG-1I-4-GB-DDR4-PS-4-GB-DDR4-PL?path=Trenz_Electronic/Modules_and_Module_Carriers/7.5x10/TE0865
7 https://wiki.trenz-electronic.de/display/~j.hartfiel

Date	Revision	Contributor	Description
			and EN_SOM. Description updated respectivelly • Block diagram updated: added PG_SOM and EN_SOM; SC_EXT_1 and SC_EXT_4 removed.
2022-10-17	v.67	JH	• Update link to the download area
2022-05-30	v.66	ED	• Update to the latest version
--	all	Pedram Babakhani[8] , ED[9] , John Hartfiel[10] , Vadim Yunitski[11]	• --

Table 29: Document change history.

8 https://wiki.trenz-electronic.de/display/~P.Babakhani
9 https://wiki.trenz-electronic.de/display/~e.dyck
10 https://wiki.trenz-electronic.de/display/~j.hartfiel
11 https://wiki.trenz-electronic.de/display/~v.yunitzki

12 Disclaimer

12.1 Data Privacy

Please also note our data protection declaration at https://www.trenz-electronic.de/en/Data-protection-Privacy

12.2 Document Warranty

The material contained in this document is provided “as is” and is subject to being changed at any time without notice. Trenz Electronic does not warrant the accuracy and completeness of the materials in this document. Further, to the maximum extent permitted by applicable law, Trenz Electronic disclaims all warranties, either express or implied, with regard to this document and any information contained herein, including but not limited to the implied warranties of merchantability, fitness for a particular purpose or non infringement of intellectual property. Trenz Electronic shall not be liable for errors or for incidental or consequential damages in connection with the furnishing, use, or performance of this document or of any information contained herein.

12.3 Limitation of Liability

In no event will Trenz Electronic, its suppliers, or other third parties mentioned in this document be liable for any damages whatsoever (including, without limitation, those resulting from lost profits, lost data or business interruption) arising out of the use, inability to use, or the results of use of this document, any documents linked to this document, or the materials or information contained at any or all such documents. If your use of the materials or information from this document results in the need for servicing, repair or correction of equipment or data, you assume all costs thereof.

12.4 Copyright Notice

No part of this manual may be reproduced in any form or by any means (including electronic storage and retrieval or translation into a foreign language) without prior agreement and written consent from Trenz Electronic.

12.5 Technology Licenses

The hardware / firmware / software described in this document are furnished under a license and may be used /modified / copied only in accordance with the terms of such license.

12.6 Environmental Protection

To confront directly with the responsibility toward the environment, the global community and eventually also oneself. Such a resolution should be integral part not only of everybody's life. Also enterprises shall be conscious of their social responsibility and contribute to the preservation of our common living space. That is why Trenz Electronic invests in the protection of our Environment.

12.7 REACH, RoHS and WEEE

REACH

Trenz Electronic is a manufacturer and a distributor of electronic products. It is therefore a so called downstream user in the sense of REACH[12]. The products we supply to you are solely non-chemical products (goods). Moreover and under normal and reasonably foreseeable circumstances of application, the goods supplied to you shall not release any substance. For that, Trenz Electronic is obliged to neither register nor to provide safety data sheet. According to present knowledge and to best of our knowledge, no SVHC (Substances of Very High Concern) on the Candidate List[13] are contained in our products. Furthermore, we will immediately and unsolicited inform our customers in compliance with REACH - Article 33 if any substance present in our goods (above a concentration of 0,1 % weight by weight) will be classified as SVHC by the European Chemicals Agency (ECHA)[14].

RoHS

Trenz Electronic GmbH herewith declares that all its products are developed, manufactured and distributed RoHS compliant.

WEEE

Information for users within the European Union in accordance with Directive 2002/96/EC of the European Parliament and of the Council of 27 January 2003 on waste electrical and electronic equipment (WEEE).

Users of electrical and electronic equipment in private households are required not to dispose of waste electrical and electronic equipment as unsorted municipal waste and to collect such waste electrical and electronic equipment separately. By the 13 August 2005, Member States shall have ensured that systems are set up allowing final holders and distributors to return waste electrical and electronic equipment at least free of charge. Member States shall ensure the availability and accessibility of the necessary collection facilities. Separate collection is the precondition to ensure specific treatment and recycling of waste electrical and electronic equipment and is necessary to achieve the chosen level of protection of human health and the environment in the European Union. Consumers have to actively contribute to the success of such collection and the return of waste electrical and electronic equipment. Presence of hazardous substances in electrical and electronic equipment results in potential effects on the environment and human health. The symbol consisting of the crossed-out wheeled bin indicates separate collection for waste electrical and electronic equipment.

Trenz Electronic is registered under WEEE-Reg.-Nr. DE97922676.

2019-06-07

12 http://guidance.echa.europa.eu/
13 https://echa.europa.eu/candidate-list-table
14 http://www.echa.europa.eu/