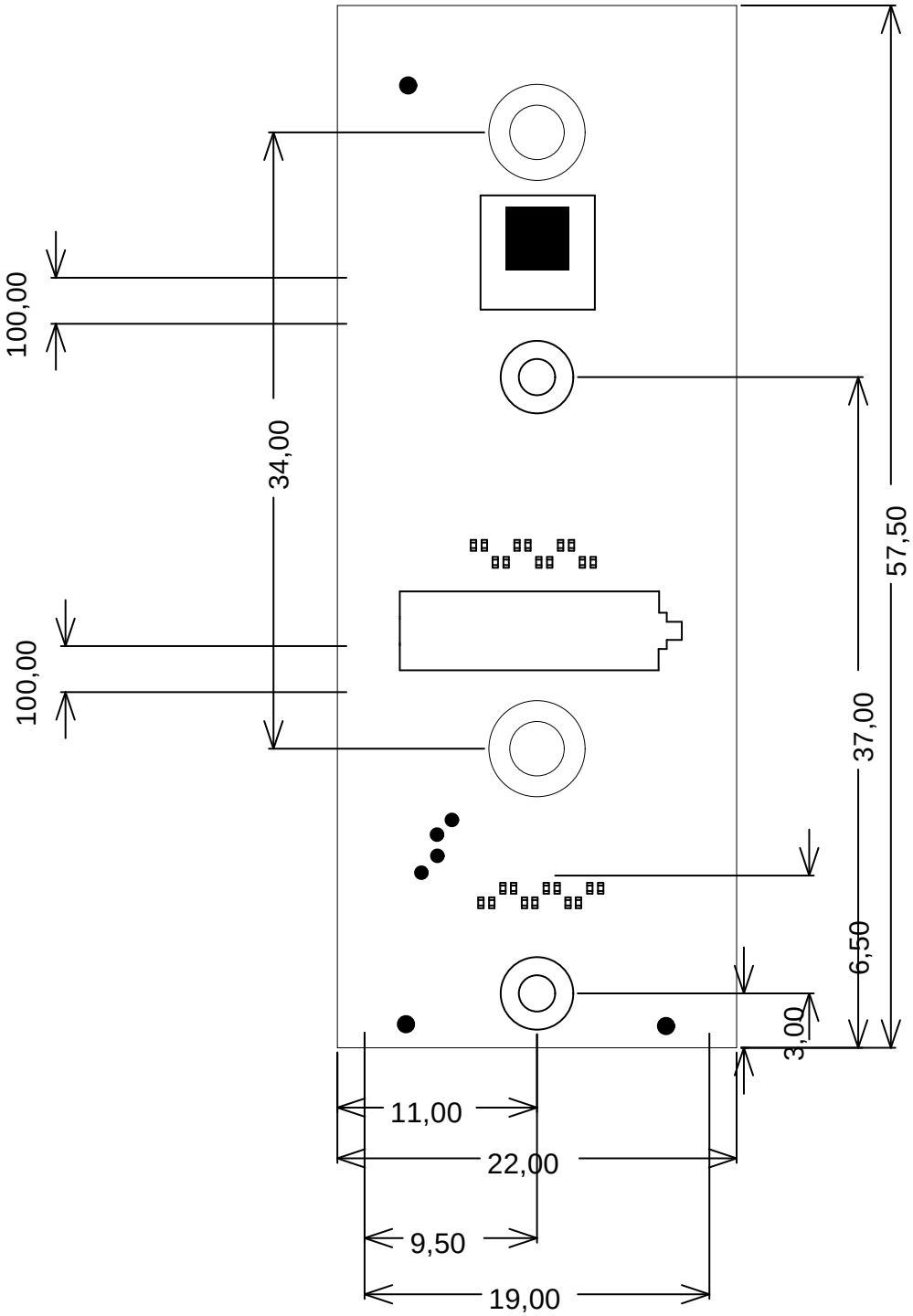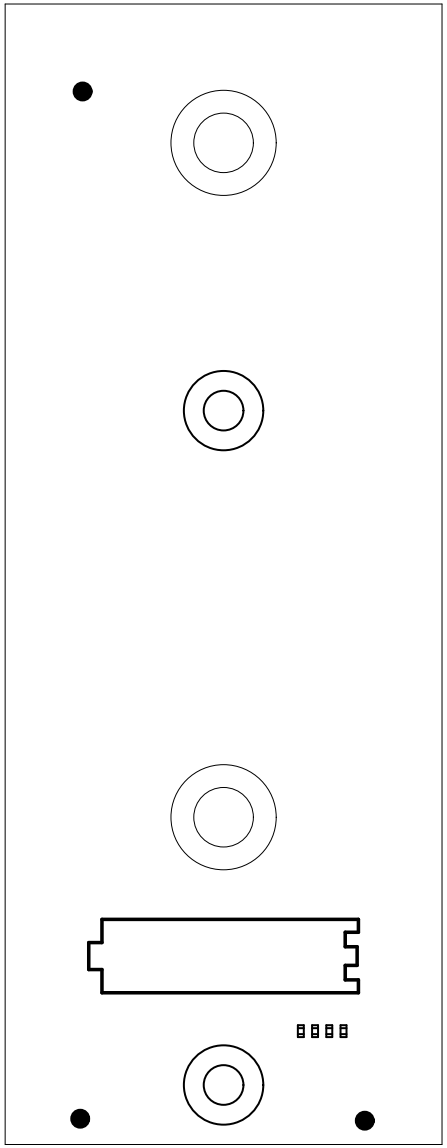Variant name: CR00026-01-A