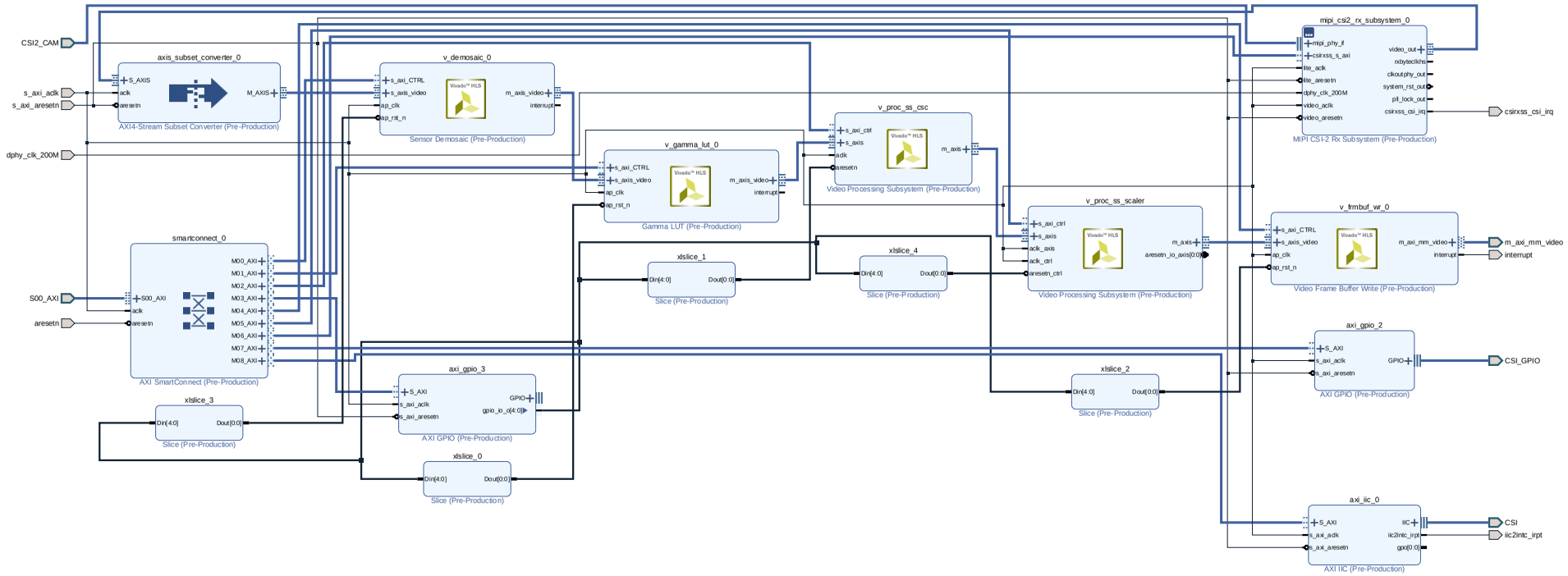
CSI2_CAM
s_axi_aclk
s_axi_aresetn
dphy_clk_200M
S00_AXI
aresetn
axis_subset_converter_0
S_AXIS
aclk
aresetn
M_AXIS
AXI4-Stream Subset Converter (Pre-Production)
smartconnect_0
S00_AXI
aclk
aresetn
M00_AXI
M01_AXI
M02_AXI
M03_AXI
M04_AXI
M05_AXI
M06_AXI
M07_AXI
M08_AXI
AXI SmartConnect (Pre-Production)
xlslice_3
Din[4:0]
Dout[0:0]
Slice (Pre-Production)
v_demosaic_0
s_axi_CTRL
s_axis_video
ap_clk
ap_rst_n
m_axis_video
interrupt
Sensor Demosaic (Pre-Production)
axi_gpio_3
S_AXI
s_axi_aclk
s_axi_aresetn
GPIO
gpio_io_o[4:0]
AXI GPIO (Pre-Production)
xlslice_0
Din[4:0]
Dout[0:0]
Slice (Pre-Production)
v_gamma_lut_0
s_axi_CTRL
s_axis_video
ap_clk
ap_rst_n
m_axis_video
interrupt
Gamma LUT (Pre-Production)
xlslice_1
Din[4:0]
Dout[0:0]
Slice (Pre-Production)
v_proc_ss_csc
s_axi_ctrl
s_axis
aclk
aresetn
m_axis
Video Processing Subsystem (Pre-Production)
xlslice_4
Din[4:0]
Dout[0:0]
Slice (Pre-Production)
v_proc_ss_scaler
s_axi_ctrl
s_axis
aclk_axis
aclk_ctrl
aresetn_ctrl
m_axis
aresetn_io_axis[0:0]
Video Processing Subsystem (Pre-Production)
xlslice_2
Din[4:0]
Dout[0:0]
Slice (Pre-Production)
mipi_csi2_rx_subsystem_0
mipi_phy_if
csirxss_s_axi
lite_aclk
lite_aresetn
dphy_clk_200M
video_aclk
video_aresetn
video_out
rxbyteclkhs
clkoutphy_out
system_rst_out
pll_lock_out
csirxss_csi_irq
MIPI CSI-2 Rx Subsystem (Pre-Production)
csirxss_csi_irq
v_frmbuf_wr_0
s_axi_CTRL
s_axis_video
ap_clk
ap_rst_n
m_axi_mm_video
interrupt
Video Frame Buffer Write (Pre-Production)
m_axi_mm_video
interrupt
axi_gpio_2
S_AXI
s_axi_aclk
s_axi_aresetn
GPIO
AXI GPIO (Pre-Production)
CSI_GPIO
axi_iic_0
S_AXI
s_axi_aclk
s_axi_aresetn
IIC
iic2intc_irpt
gpo[0:0]
AXI IIC (Pre-Production)
CSI
iic2intc_irpt