Variant name: TEC0060-02-[No Variations]

Top View

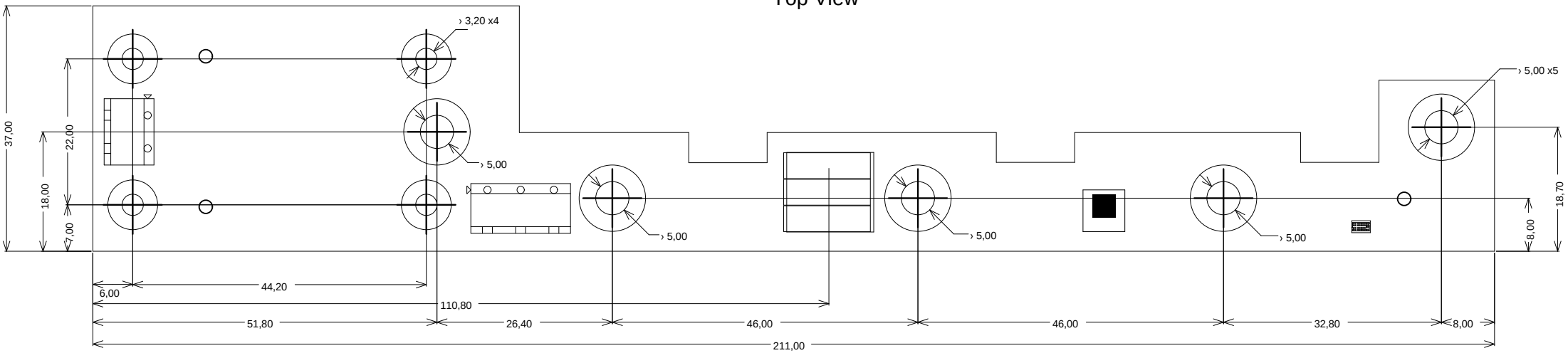
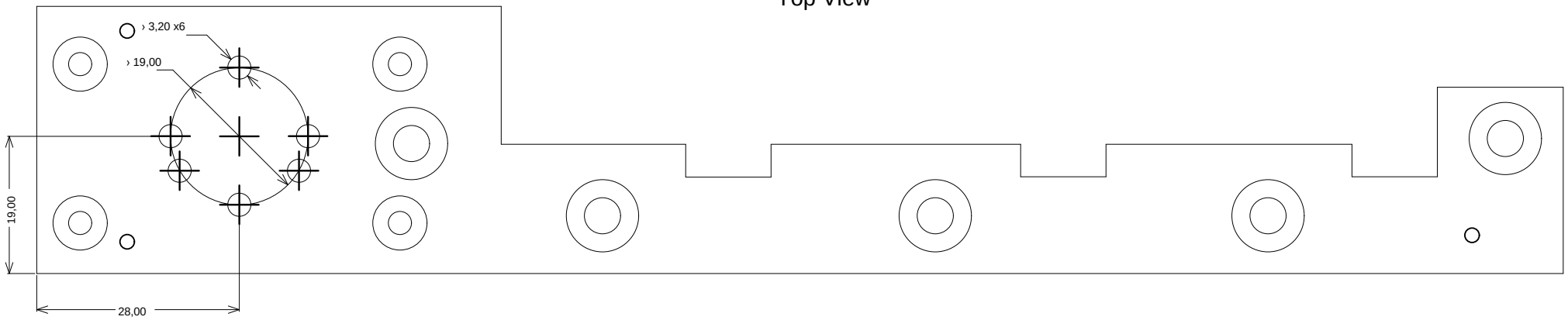
Top View