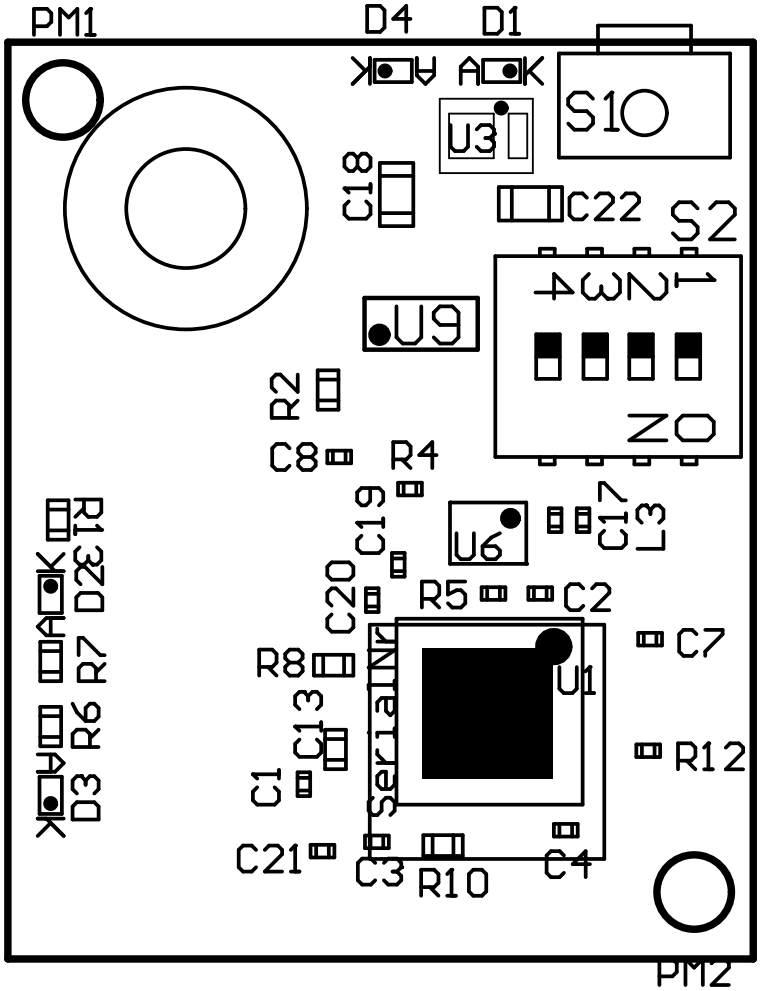
PM1
D4
D1
A
K
A
K
S1
U3
C18
C22
S2
1
2
3
4
ON
U9
R2
C8
R4
C19
U6
C17
L3
R1
D2
K
A
R7
R6
D3
K
A
C20
R5
C2
C7
R8
U1
C13
R12
C1
SerialNr
C21
C3
R10
C4
PM2

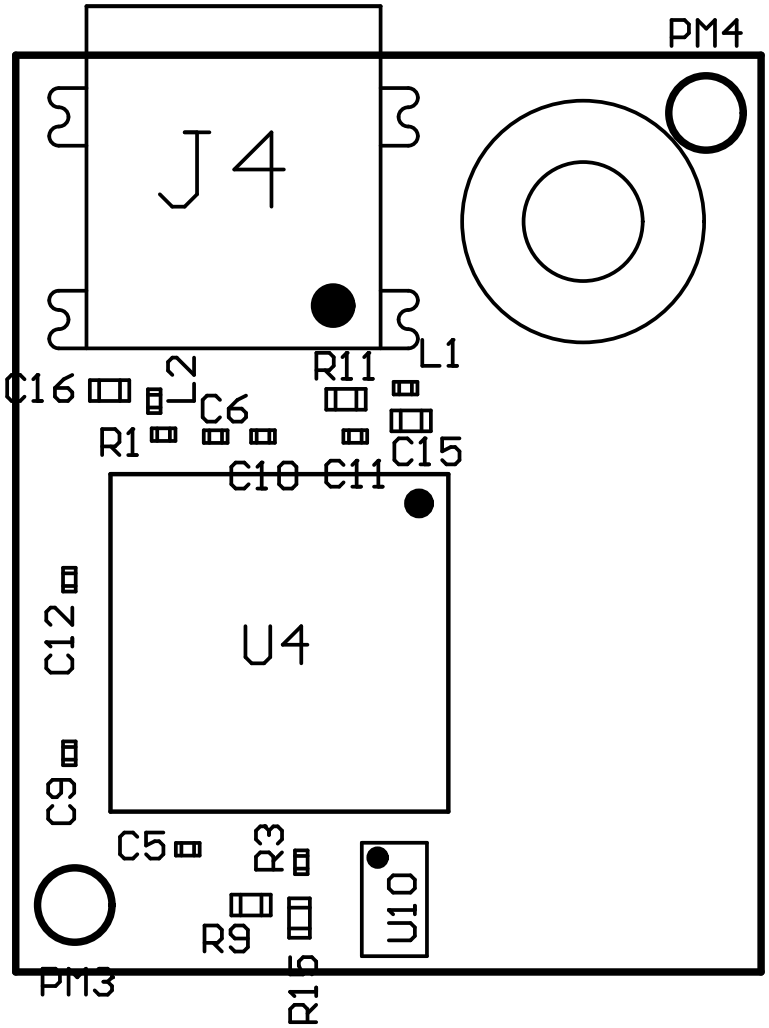
PM4
J4
L1
R11
L2
C16
C6
R1
C15
C10
C11
U4
C12
C9
C5
R3
U10
R9
R15
PM3

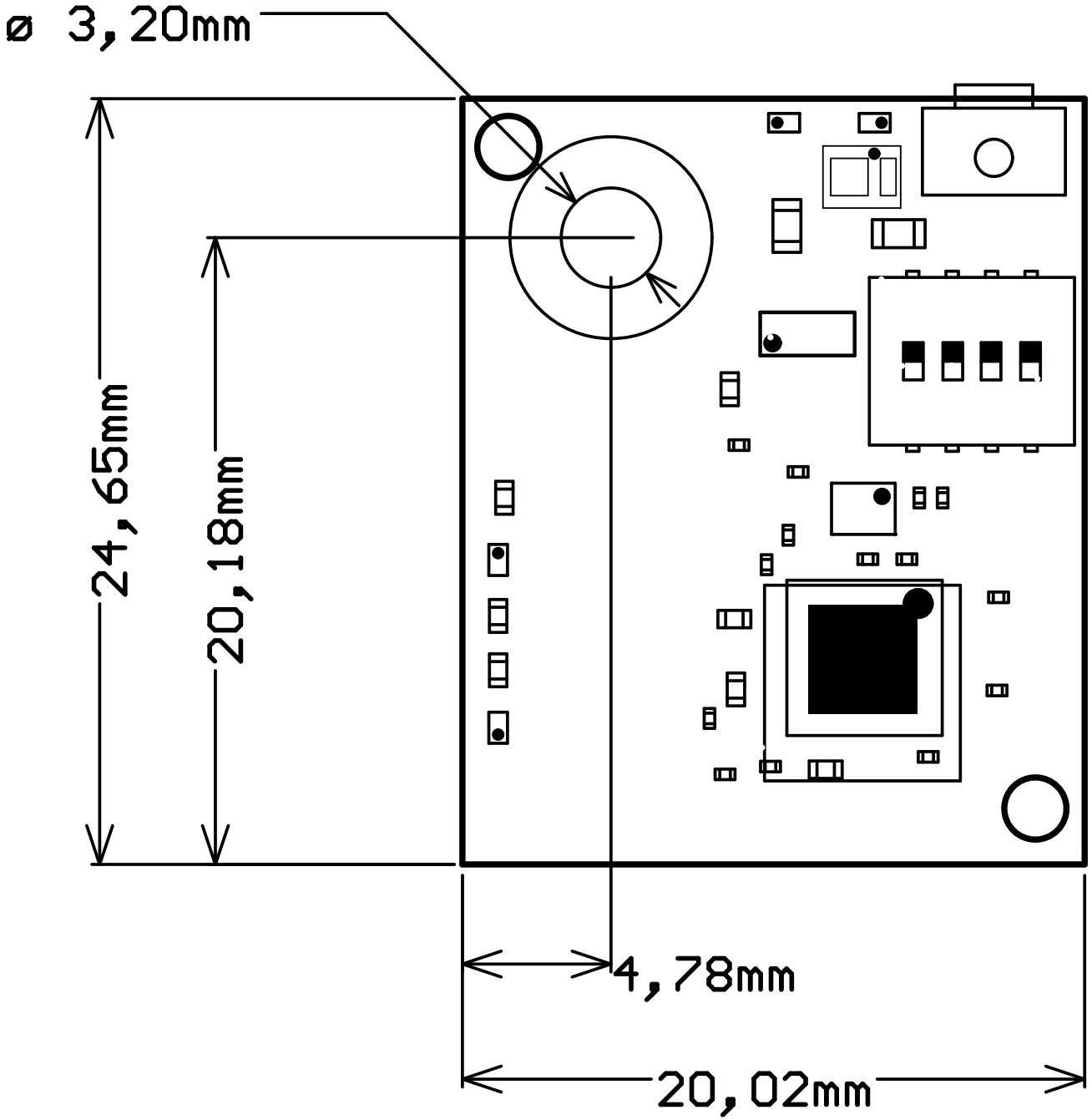
ø 3,20mm
24,65mm
20,18mm
4,78mm
20,02mm

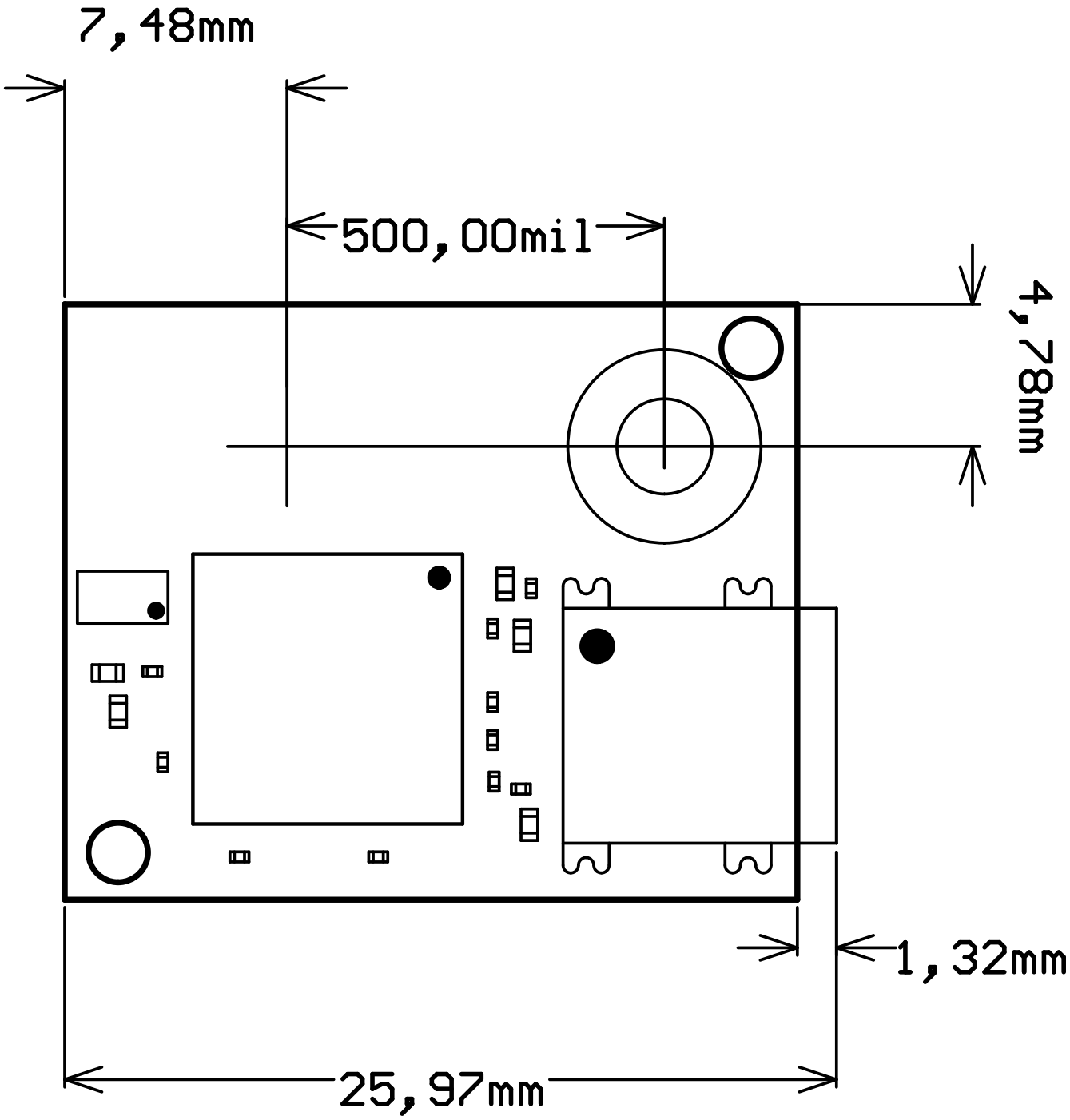
7,48mm
500,00mil
4,78mm
1,32mm
25,97mm