TE0790 TRM

Revision v.37

Exported on 2019-03-01

Online version of this document:

https://wiki.trenz-electronic.de/display/PD/TE0790+TRM

1 Table of Contents

1 Table of Contents 2
2 Table of Figures 4
3 Table of Tables 5
4 Overview 6
4.1 Key Features 7
4.2 Block Diagram 8
4.3 Main Components 9
4.4 Initial Delivery State 10
5 Signals, Interfaces and Pins 11
5.1 2x6 Pin Header 11
5.2 USB Interface 15
6 On-board Peripherals 16
6.1 FTDI FT2232H IC 16
6.2 Configuration EEPROM 16
6.3 System Controller CPLD 16
6.4 DIP-switch 16
6.5 User Push Button 18
6.6 On-board LEDs 18
7 Power and Power-On Sequence 19
7.1 Power supply of the adapter board 19
7.2 Power Rails 19
8 Variants Currently In Production 20
9 Technical Specifications 21
9.1 Absolute Maximum Ratings 21
9.2 Recommended Operating Conditions 21
9.3 Operating Temperature Range 21
9.4 Physical Dimensions 22
10 Revision History 24
10.1 Hardware Revision History 24
10.2 Document Change History 24
11 Disclaimer 26
11.1 Data privacy 26
11.2 Document Warranty 26
11.3 Limitation of Liability 26
11.4 Copyright Notice 26

Copyright © 2019 Trenz Electronic GmbH

11.5 Technology Licenses 26
11.6 Environmental Protection 26
11.7 REACH, RoHS and WEEE 26

Copyright © 2019 Trenz Electronic GmbH

2 Table of Figures

Copyright © 2019 Trenz Electronic GmbH

3 Table of Tables

Copyright © 2019 Trenz Electronic GmbH

4 Overview

https://wiki.trenz-electronic.de/display/PD/TE0790+TRM for the current online version of this manual and other available documentation. The Trenz Electronic TE0790 is an universal USB2.0 to JTAG, UART and GPIO adapter based on the FTDI FT2232H USB2 IC. The adapter board converts signals from USB2.0 to standard serial or parallel interfaces of Embedded Systems like JTAG, SPI, I^2C and UART.
The board is equipped with a programmable System Controller CPLD provided by Lattice Semiconductor LCMXO2-256HC (MachXO2 Product Family) to control the signals of the configured interfaces. The data stream of the USB2.0 port can be also converted to 8 independent GPIO's or used as FIFO.

In order to work with Xilinx tools special order must be used, in that case the EEPROM is pre-programmed and serialized and will be recognized by all Xilinx tools (ISE/Impact/Chipscope, Vivado Programmer/SDK..).

Following table describes the possible operation modes of the TE0790 adapter board. The operation modes are determined by the configuration of the FT2232H (done by programing the Configuration EEPROM) and the firmware implementation of the System Controller CPLD:

#	FTDI Channel A	FTDI Channel B	Pins A to G	Notes
1	JTAG/SPI (MPSSE)	UART	JTAG, UART	JTAG compatible to Xilinx, Lattice and open-source software that uses FTDI MPPSE
2	JTAG/SPI (MPSSE)	JTAG/SPI (MPSSE)	JTAG, JTAG	Dual JTAG, only Channel A is Xilinx compatible
3	UART	UART	UART, UART	Dual UART
4	I2C	UART	I2C, UART	
5	MPSSE		8x GPIO	
6		UART	8x GPIO	
7	UART	UART	not used	UART to UART loopback
8	not used	Fast Serial		FTDI 4-wire fast serial adapter, custom EEPROM is needed to enable this mode
9	CPLD update only	not used	user defined	Standalone Module with CPLD and 8 user programmable I/O

Table 1: Initial delivery state of programmable devices on the module.

MPSSE - FTDI protocol that is used by JTAG and SPI adapters based on FTDI devices.

Copyright © 2019 Trenz Electronic GmbH

Important notice on TE0790-xx variants:
Do not access the FT2232H EEPROM using FTDI programming tools, doing so will erase normally invisible user EEPROM content and invalidate stored Xilinx JTAG license. Without this license the on-board JTAG will not be accessible any more with any Xilinx tools. Software tools from FTDI website do not warn or ask for confirmation before erasing user EEPROM content.

4.1 Key Features

- Xmod form-factor
  - size: 20 x 25 mm
  - M3 mounting hole
- FT2232H
  - USB2.0 port High Speed (480 Mbps) and Full Speed (12 Mbps) compatible
  - Entire USB protocol handled on the chip
  - USB2.0 to JTAG, SPI and I^2C conversion provided by the IC's Multi-Protocol Synchronous Serial Engine (MPSSE)
  - USB2.0 to UART conversion
  - Channel B UART RX/TX LED's
  - Mini-USB B connector (more rigid then micro-USB)
  - 93C56 EEPROM
- Lattice XO2-256 CPLD
  - on board programmable using Lattice tools
  - 8 universal I/O pins
  - VCCIO either 3.3V or user supplied (1.8 to 3.3V)
  - RED user LED
  - 12 MHz clock from on-board Oscillator
- Variable power supply of the XMOD adapter board
  - by Mini USB2.0 connector
  - by base-board through pin header J2
- GREEN Power-on LED
- User button
- 4 position DIP switch
  - Choose CPLD program mode
  - FTDI EEPROM disable (not implemented in PCB REV 1)
  - Use VIO same as VCC
  - Use VCC from USB

Copyright © 2019 Trenz Electronic GmbH

4.2 Block Diagram

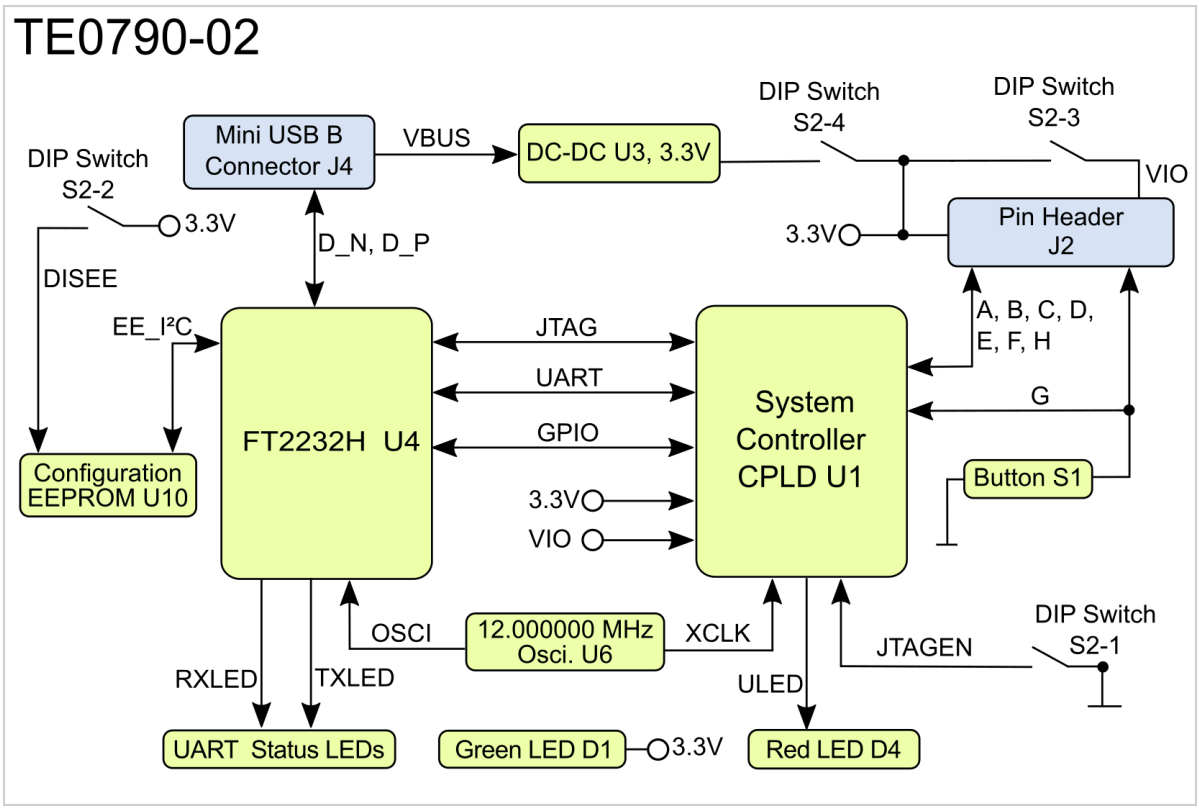

Figure 1: TE0790-02 block diagram.

Copyright © 2019 Trenz Electronic GmbH

4.3 Main Components

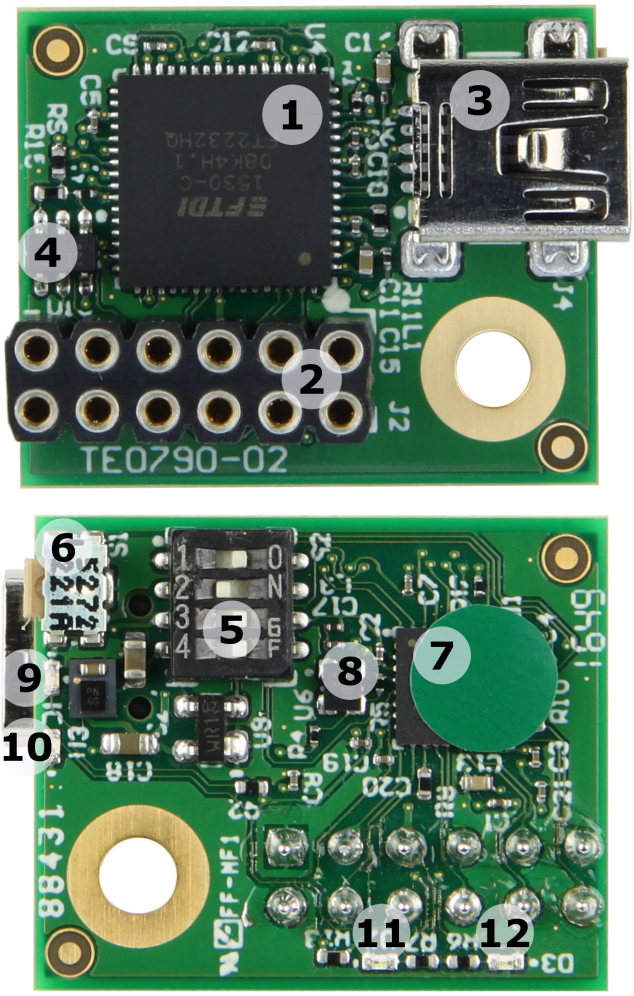

Figure 2: TE0790-02 main components.

1. FTDI FT2232H IC U4
2. 2x6 Pin Header (2.54mm, female), J2
3. Mini USB B Connector J4
4. Microchip 93AA56BT-I/OT Configuration EEPROM, U10
5. DIP-switch S2
6. Push button S1
7. Lattice Semiconductor LCMXO2-256HC System Controller CPLD, U1
8. SiTime SiT8008AI-73 oscillator @12MHz, U6
9. Green LED, D1 (Power)
10. Red LED, D4 (User)
11. Red LED, D3 (UART RX)
12. Red LED, D2 (UART TX)

Copyright © 2019 Trenz Electronic GmbH

4.4 Initial Delivery State

Storage device name	Content	Notes
Configuration EEPROM U10	variant depending	only programmed on TE-0790-xx, not programmed on TE0790-xxL

Table 2: Initial delivery state of programmable devices on the module.

Copyright © 2019 Trenz Electronic GmbH

5 Signals, Interfaces and Pins

5.1 2x6 Pin Header

The 2x6 pin header (2.54mm grid size, female) J2 have to be connected to the corresponding pin header on the target system. The signal assignment of the pin header on the adapter board depends on the configuration of the System Controller CPLD firmware.

Basic pin assignment:

Signal	J2 Pin Name	J2 Pin Name	Signal
GND		1*	**GND**
User Defined	C	A	User Defined
VIO			**VDD 3.3V**
User Defined	D	B	User Defined
User Defined	F	E	User Defined
User Defined	H	G	User Defined / Button (Reset_n)

Table 3: Pin header J2 signal assignment. *pin 1 on header J2

Copyright © 2019 Trenz Electronic GmbH

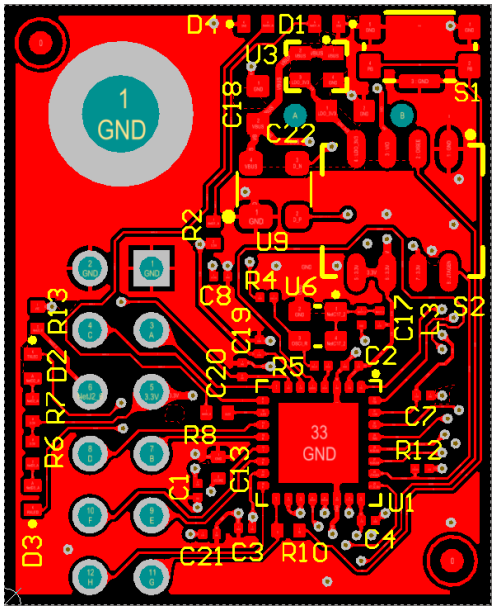

Top View

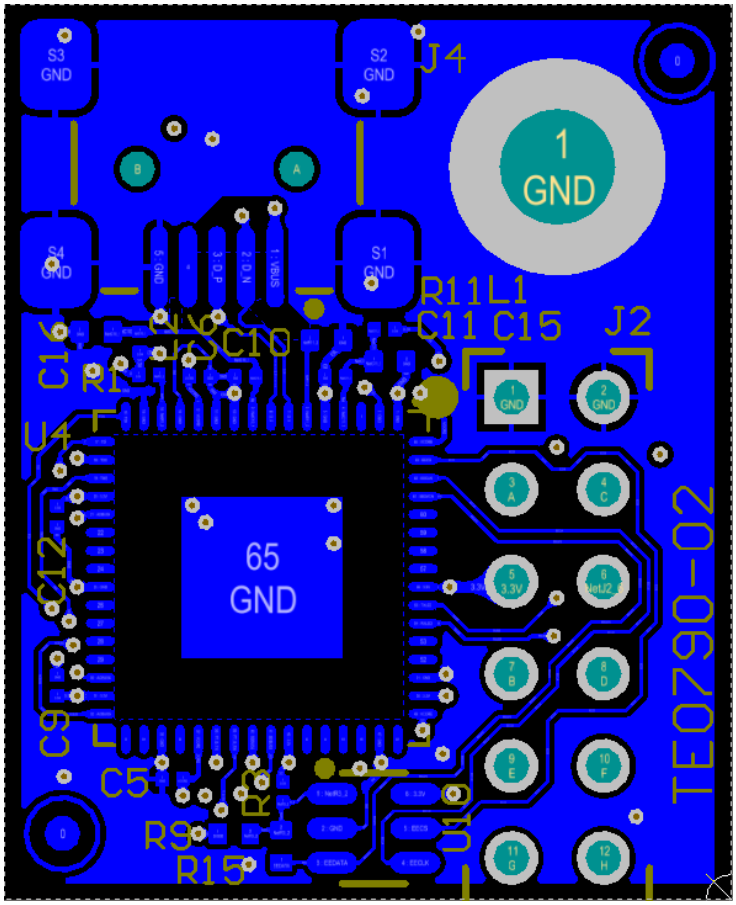

Bottom View flipped

Figure 3: J2 pin header signal assignment

The signals of the FTDI FT2232H chip are not directly connected to the pin header J2 but routed to the System Controller CPLD of the adapter board, which controls and by-passes the signals to the pin header J2.

Therefore, different signal assignments are made on the pin header J2 depending on the SC CPLD firmware:

Signal assignment on TE0790 CPLD - XMOD Standard:[1]

FTDI	Signal	Pull up/ down	J2 Pin Name	J2 Pin Name	Pull up/ down	Signal	FTDI
	GND	-		1*	-	**GND**	
ADBUS 0	TCK (out put from adapter)		C	A	up	UART RXD (input to adapter)	BDBUS 1

1 https://wiki.trenz-electronic.de/display/PD/TE0790+CPLD+-+XMOD+Standard

Copyright © 2019 Trenz Electronic GmbH

FTDI	Signal	Pull up/ down	J2 Pin Name	J2 Pin Name	Pull up/ down	Signal	FTDI
	VIO	-			-	**VDD 3.3V**	
ADBUS 2	TDO (input to adapter)	up	D	B		UART TXD (output from adapter)	BDBUS 0
ADBUS 1	TDI (output from adapter)		F	E	down	LED	
ADBUS 3	TMS (out put from adapter)		H	G	up	Button (Reset_n)	

Table 4: Pin header J2 signal assignment with standard configuration firmware. *pin 1 on header J2

Signal assignment on Standard with RXD-TXD Swapped[2]:

This is the same as the standard configuration except that UART RXD and TXD pins are swapped.

FTDI	Signal	Pull up/ down	J2 Pin Name	J2 Pin Name	Pull up/ down	Signal	FTDI
	GND	-		1*	-	**GND**	
ADBUS 0	TCK (out put from adapter)		C	A		UART TXD (outp ut from adapter)	BDBUS 0
	VIO	-			-	**VDD 3.3V**	
ADBUS 2	TDO (input to adapter)	up	D	B	up	UART RXD (input to adapter)	BDBUS 1

2 https://wiki.trenz-electronic.de/display/PD/TE0790+CPLD+-+XMOD+Standard

Copyright © 2019 Trenz Electronic GmbH

FTDI	Signal	Pull up/ down	J2 Pin Name	J2 Pin Name	Pull up/ down	Signal	FTDI
ADBUS 1	TDI (output from adapter)		F	E	down	LED	
ADBUS 3	TMS (out put from adapter)		H	G	up	Button (Reset_n)	

Table 5: Pin header J2 signal assignment with standard, but RXD-TXD swapped configuration firmware. *pin 1 on header J2

Signal assignment on TE0790 CPLD -[3] X[4]MOD DIP40:[5]

On DIPFORTy, VIO Pin is connected with VDD 3.3V Pin. UART RXD is connected to FPGA-Pin L13 and UART TXD to K15. Connect XMOD on the top-side (FPGA side) of the PCB.

FTDI	Signal	Pull up/ down	J2 Pin Name	J2 Pin Name	Pull up/ down	Signal	FTDI
	GND	-		1*	-	**GND**	
BDBUS 1	UART RXD (input to adapter)	up	C	A		TCK (out put from adapter)	ADBUS 0
	VIO	-			-	**VDD 3.3 V**	
BDBUS 0	UART TXD (output from adapter)		D	B		TMS (output from adapter)	ADBUS 3
ADBUS 1	TDI (outp ut from adapter)		F	E	up	TDO (inp ut to adapter)	ADBUS 2

3 https://wiki.trenz-electronic.de/display/PD/TE0790+CPLD+-+XMOD+DIP40
4 https://wiki.trenz-electronic.de/display/PD/TE0790+CPLD+-+XMOD+DIP40
5 https://wiki.trenz-electronic.de/display/PD/TE0790+CPLD+-+XMOD+DIP40

Copyright © 2019 Trenz Electronic GmbH

FTDI	Signal	Pull up/ down	J2 Pin Name	J2 Pin Name	Pull up/ down	Signal	FTDI
	not used		H	G		CPLD User LED 'ULED'	

Table 6: Pin header J2 signal assignment with DIPFORTy firmware.

5.2 USB Interface

The USB2.0 interface is provided by the FTDI FT2232H chip accessible by the Mini-USB B connector J4. The entire USB protocol is handled on chip and compatible to USB2.0 High Speed (480 MBps) and Full Speed (12 MBps).

Copyright © 2019 Trenz Electronic GmbH

6 On-board Peripherals

6.1 FTDI FT2232H IC

The FTDI FT2232H chip provides a variety of industry standard serial or parallel interfaces. On the TE0790 adapter board at current available SC CPLD firmware the functions USB2.0 to JTAG, UART and user GPIO's.

By programing the firmware of the SC CPLD and special EEPROM configurations further further functionalities are available of the FTDI chip which converts signals from USB2.0 to a variety of standard serial and parallel interfaces. Refer to the FTDI data sheet[6] to get information about the capacity of the FT2232H IC.

6.2 Configuration EEPROM

The external EEPROM can be used to customize the TE0790 adapter board by setting numerous parameters of the FT2232H IC, enabling different functionalities and configuring serial or parallel interfaces.

The EEPROM is programmable in-circuit over USB using a utility program called FT_PROG available from FTDI's web site (www.ftdichip.com[7]).

Important notice on TE0790-xx variants:
Do not access the FT2232H EEPROM using FTDI programming tools, doing so will erase normally invisible user EEPROM content and invalidate stored Xilinx JTAG license. Without this license the on-board JTAG will not be accessible any more with any Xilinx tools. Software tools from FTDI website do not warn or ask for confirmation before erasing user EEPROM content.

6.3 System Controller CPLD

The System Controller CPLD (U1) is provided by Lattice Semiconductor LCMXO2-256HC (MachXO2 Product Family). The SC-CPLD is the central system management unit where essential control signals are logically linked by the implemented logic in CPLD firmware, which generates output signals to control the system, the on-board peripherals and the interfaces.

Signals of the serial or parallel interfaces are by-passed, forwarded and controlled by the System Controller CPLD.

The internal routing of the signals on the System Controller CPLD between the USB2.0 interface and pin header J2 depends on its configured firmware. CPLD can be set into JTAG chain via S2-1 DIP Switch (see page 16). Refer to the TE0790 CPLD Firmware[8] for more information about the currently available System Controller CPLD firmware and for download.

6.4 DIP-switch

The DIP-switch S2 is to set different modes of powering the on-board components, the I/O voltages and to enable programming the adapter board CPLD by JTAG interface:

6 http://www.ftdichip.com/Support/Documents/DataSheets/ICs/DS_FT2232H.pdf
7 http://www.ftdichip.com
8 https://wiki.trenz-electronic.de/display/PD/TE0790+CPLD+Firmware

Copyright © 2019 Trenz Electronic GmbH

S2	ON	OFF	Default	Description
1	Normal mode	Adapter board CPLD update mode	ON	Update Mode JTAG access to SC CPLD only
2	Do not use (illegal setting)	Normal mode	OFF	Must be in OFF state always.
3	VIO connected to 3.3V	Power VIO from pin header J2	OFF	User I/O Voltage
4	Power 3.3V from USB	Power 3.3V from pin header J2	OFF	Power on-board peripherals (FTDI chip & SC CPLD, ...)

Table 7: DIP-switch S2 setting description.

The voltages 3.3V (VCC) and VIO (variable SC CPLD I/O-voltage) can be configured by the DIP-switches S2-3 and S2-4:

S2-3	S2-4	3.3V (VCC) Pin 5	VIO Pin 6	Description
OFF	OFF	3.3V from base (input**)	VIO from base (input**)	3.3V (pin 5) and VIO (pin 6) sourced from base
OFF	ON	3.3V from USB* (output**)	VIO from base (input**)	VIO sourced from base by Pin 6
ON	OFF	3.3V from base (input**)	3.3V from base (input**)	VIO and 3.3V source by base (Pin 5 and Pin 6 are shorted and both must be sourced by 3.3V)
ON	ON	3.3V from USB* (output**)	3.3V from USB* (output**)	3.3V (pin 5) and VIO (pin 6) sourced USB (Pin 5 and Pin 6 are shorted and both are 3.3V)

- ***max. 100mA** for external components (It's not recommended to supply FPGA Module**)**
  Attention: Do not use this setting, if base power supply is connected to this pins! For more details see Power supply of the adapter board (see page 19) section.
- ****view of XMOD

Table 8: DIP-switch S2 power setting description**.**

Copyright © 2019 Trenz Electronic GmbH

6.5 User Push Button

The user push button S1 directly connected to the SC CPLD manipulates pin G of the pin header J2 by driving it to GND.

6.6 On-board LEDs

The on-board LEDs indicates system status data transmission activities:

LED	Color	Connected to	Description and Notes
D1	Green	3.3V	3.3V power status LED
D2	Red	FTDI IC, 'RXLED'	UART receive data activity
D3	Red	FTDI IC, 'TXLED'	UART transmit data activity
D4	Red	SC CPLD, 'ULED'	user LED, on standard SC CPLD firmware assigned to pins E and G, in DIPFORTy to G

Table 9: On-board LEDs.

Copyright © 2019 Trenz Electronic GmbH

7 Power and Power-On Sequence

7.1 Power supply of the adapter board

The XMOD can be powered via USB or with 3.3V on J2 pins, depending on DIP-switch settings (see page 16). **Max. ~100mA** for external components are available on J2 3.3V Pin, if the power supply via USB is used.

Following diagram shows how the settings of the DIP-switches S2-3 and S2-4 determines the configuration of the on-board voltages:

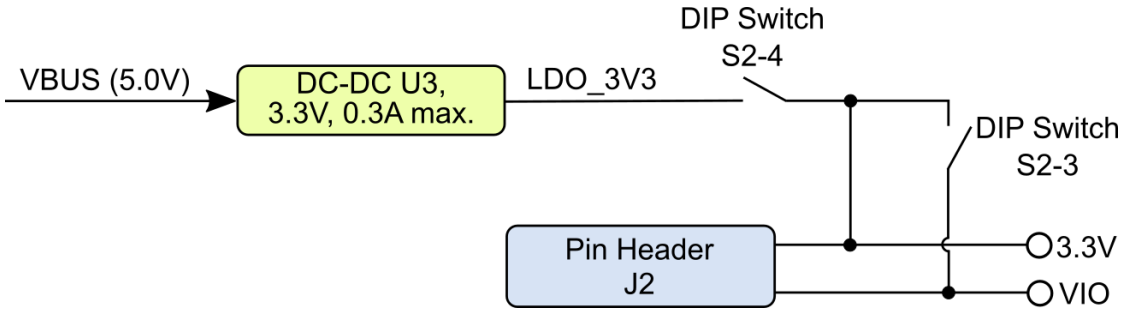

Figure 4: TE0790 on-board voltages configuration

7.2 Power Rails

Power Rail Name	Pin Header J2	Mini USB B J4	Direction	Notes
3.3V	pin 5	-	both possible	on-board peripherals' VCC and core voltages
VIO	pin 6	-	both possible	Pin header J2 interface signals and SC CPLD VCCIO
VBUS	-	pin 1	input	USB bus power, nominal voltage 5 V ± 5%

Table 10: power rails.

Copyright © 2019 Trenz Electronic GmbH

8 Variants Currently In Production

Module Variant	Xilinx Vivado/ SDK Support	Xilinx devices with 3rd Party Tools	Any other MPSSE based JTAG Tools
TE0790-02	Yes	Yes	Yes
TE0790-02L	No	Yes	Yes

Table 11: Module variants.

Variants with TE-0790-xxL do not include the ID String in EEPROM for direct support from Xilinx Vivado.

Copyright © 2019 Trenz Electronic GmbH

9 Technical Specifications

9.1 Absolute Maximum Ratings

Parameter	Min	Max	Units	Reference Document
3.3V	-0.3	4	V	FTDI FT2232H data sheet
VIO	-0.5	3.75	V	Lattice MachX02 Family data sheet
VBUS	4.75	5.25	V	USB2.0 Specification
Voltage on pins A - H	-0.5	3.75	V	Lattice MachX02 Family data sheet
Storage temperature	-40	100	°C	LED SML-P11 data sheet

Table 12: Module absolute maximum ratings.

9.2 Recommended Operating Conditions

Parameter	Min	Max	Units	Reference Document
3.3V	2.375	3.6	V	Lattice MachX02 Family data sheet
VIO	1.14	3.6	V	Lattice MachX02 Family data sheet
VBUS	4.75	5.25	V	USB2.0 Specification
Voltage on pins A - H	1.14	3.6	V	Lattice MachX02 Family data sheet
Operating temperature	-40	85	°C	FTDI FT2232H data sheet

Table 13: Module recommended operating conditions.

9.3 Operating Temperature Range

Industrial grade: -40°C to +85°C.

The TE0790 USB2.0 adapter board is capable to be operated at industrial grade temperature range.

Copyright © 2019 Trenz Electronic GmbH

9.4 Physical Dimensions

- Module size: 24,65mm × 20,02mm. Please download the assembly diagram for exact numbers.
- Mating height with standard pin headers: 9.5 mm.
- PCB thickness: 1.6 mm.
- Highest part on PCB: approx. 7 mm. Please download the step model for exact numbers.

All dimensions are given in millimeters and mil.

Copyright © 2019 Trenz Electronic GmbH

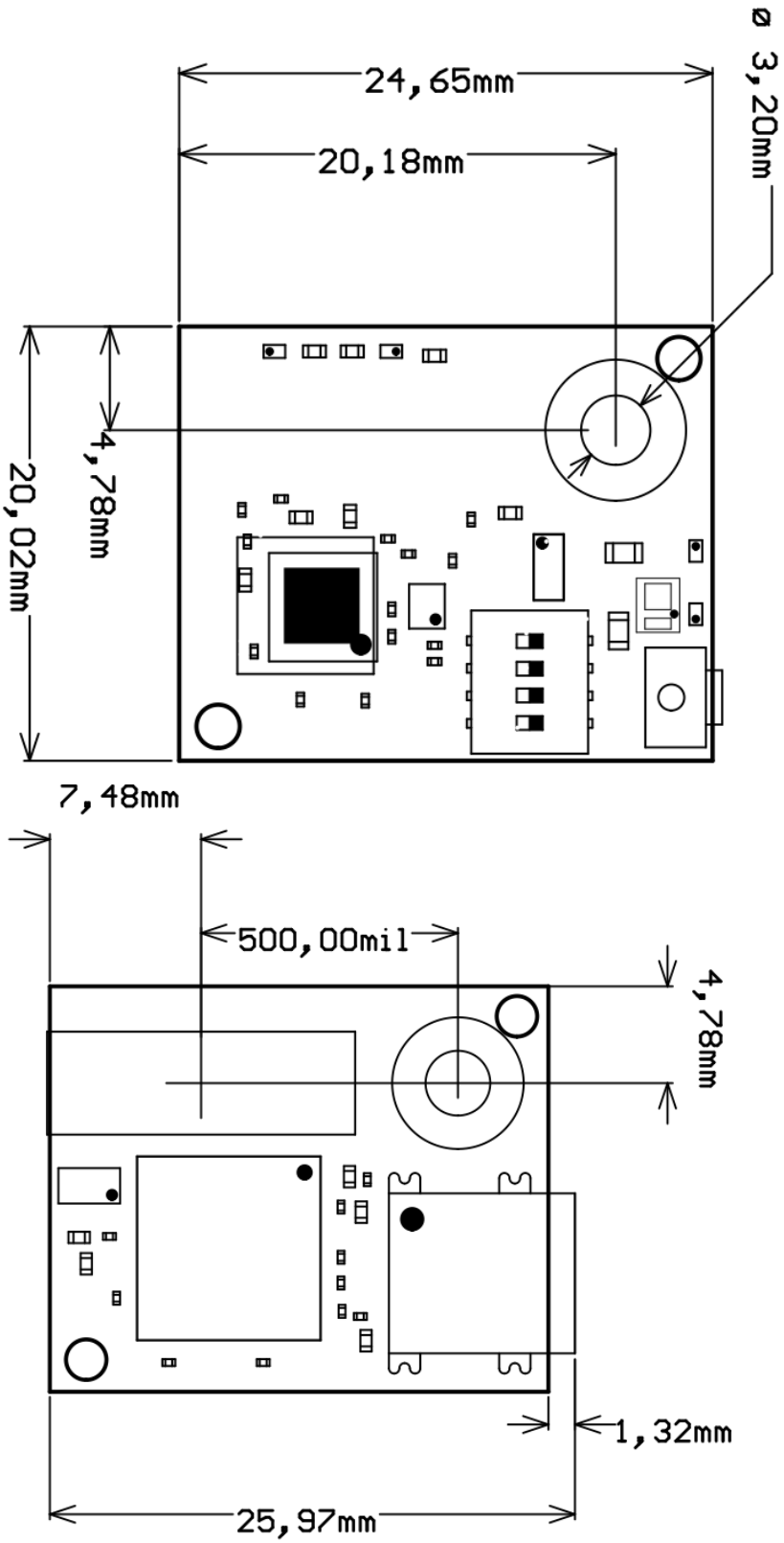

Figure 5: Module physical dimensions drawing.

10 Revision History

10.1 Hardware Revision History

Date	Revision	Notes	PCN	Documentation Link
-	01	prototypes	-	-
-	02	current available revision	-	TE0790-02[9]

Table 14: Module hardware revision history.

Hardware revision number can be found on the PCB board together with the module model number separated by the dash.

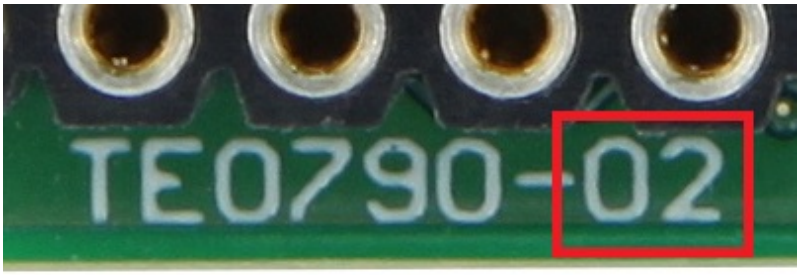

Figure 6: Module hardware revision number.

10.2 Document Change History

Date	Revision	Contributors	Description
2018-01-18	v.37	John Hartfiel	• DIP-Switch description
2017-11-16	v.34	Ali Naseri	Updated Power supply, DIP-Switch and CPLD section
2017-10-26	v.27	John Hartfiel	• Update 2x6 Pin Header Figure 3 • Update Links
2017-10-19	v.26	Ali Naseri	• Initial document

9 https://shop.trenz-electronic.de/de/Download/?path=Trenz_Electronic/XMOD/TE0790/REV02

Copyright © 2019 Trenz Electronic GmbH

Table 15: Document change history.

11 Disclaimer

11.1 Data privacy

Please also note our data protection declaration at https://www.trenz-electronic.de/en/Data-protection-Privacy

11.2 Document Warranty

The material contained in this document is provided “as is” and is subject to being changed at any time without notice. Trenz Electronic does not warrant the accuracy and completeness of the materials in this document. Further, to the maximum extent permitted by applicable law, Trenz Electronic disclaims all warranties, either express or implied, with regard to this document and any information contained herein, including but not limited to the implied warranties of merchantability, fitness for a particular purpose or non infringement of intellectual property. Trenz Electronic shall not be liable for errors or for incidental or consequential damages in connection with the furnishing, use, or performance of this document or of any information contained herein.

11.3 Limitation of Liability

In no event will Trenz Electronic, its suppliers, or other third parties mentioned in this document be liable for any damages whatsoever (including, without limitation, those resulting from lost profits, lost data or business interruption) arising out of the use, inability to use, or the results of use of this document, any documents linked to this document, or the materials or information contained at any or all such documents. If your use of the materials or information from this document results in the need for servicing, repair or correction of equipment or data, you assume all costs thereof.

11.4 Copyright Notice

No part of this manual may be reproduced in any form or by any means (including electronic storage and retrieval or translation into a foreign language) without prior agreement and written consent from Trenz Electronic.

11.5 Technology Licenses

The hardware / firmware / software described in this document are furnished under a license and may be used / modified / copied only in accordance with the terms of such license.

11.6 Environmental Protection

To confront directly with the responsibility toward the environment, the global community and eventually also oneself. Such a resolution should be integral part not only of everybody's life. Also enterprises shall be conscious of their social responsibility and contribute to the preservation of our common living space. That is why Trenz Electronic invests in the protection of our Environment.

11.7 REACH, RoHS and WEEE

REACH

Copyright © 2019 Trenz Electronic GmbH

Trenz Electronic is a manufacturer and a distributor of electronic products. It is therefore a so called downstream user in the sense of REACH[10]. The products we supply to you are solely non-chemical products (goods). Moreover and under normal and reasonably foreseeable circumstances of application, the goods supplied to you shall not release any substance. For that, Trenz Electronic is obliged to neither register nor to provide safety data sheet. According to present knowledge and to best of our knowledge, no SVHC (Substances of Very High Concern) on the Candidate List[11] are contained in our products. Furthermore, we will immediately and unsolicited inform our customers in compliance with REACH - Article 33 if any substance present in our goods (above a concentration of 0,1 % weight by weight) will be classified as SVHC by the European Chemicals Agency (ECHA)[12].

RoHS

Trenz Electronic GmbH herewith declares that all its products are developed, manufactured and distributed RoHS compliant.

WEEE

Information for users within the European Union in accordance with Directive 2002/96/EC of the European Parliament and of the Council of 27 January 2003 on waste electrical and electronic equipment (WEEE).

Users of electrical and electronic equipment in private households are required not to dispose of waste electrical and electronic equipment as unsorted municipal waste and to collect such waste electrical and electronic equipment separately. By the 13 August 2005, Member States shall have ensured that systems are set up allowing final holders and distributors to return waste electrical and electronic equipment at least free of charge. Member States shall ensure the availability and accessibility of the necessary collection facilities. Separate collection is the precondition to ensure specific treatment and recycling of waste electrical and electronic equipment and is necessary to achieve the chosen level of protection of human health and the environment in the European Union. Consumers have to actively contribute to the success of such collection and the return of waste electrical and electronic equipment. Presence of hazardous substances in electrical and electronic equipment results in potential effects on the environment and human health. The symbol consisting of the crossed-out wheeled bin indicates separate collection for waste electrical and electronic equipment.

Trenz Electronic is registered under WEEE-Reg.-Nr. DE97922676.

2018-09-18

02.09.2017

10 http://guidance.echa.europa.eu/
11 https://echa.europa.eu/candidate-list-table
12 http://www.echa.europa.eu/

Copyright © 2019 Trenz Electronic GmbH