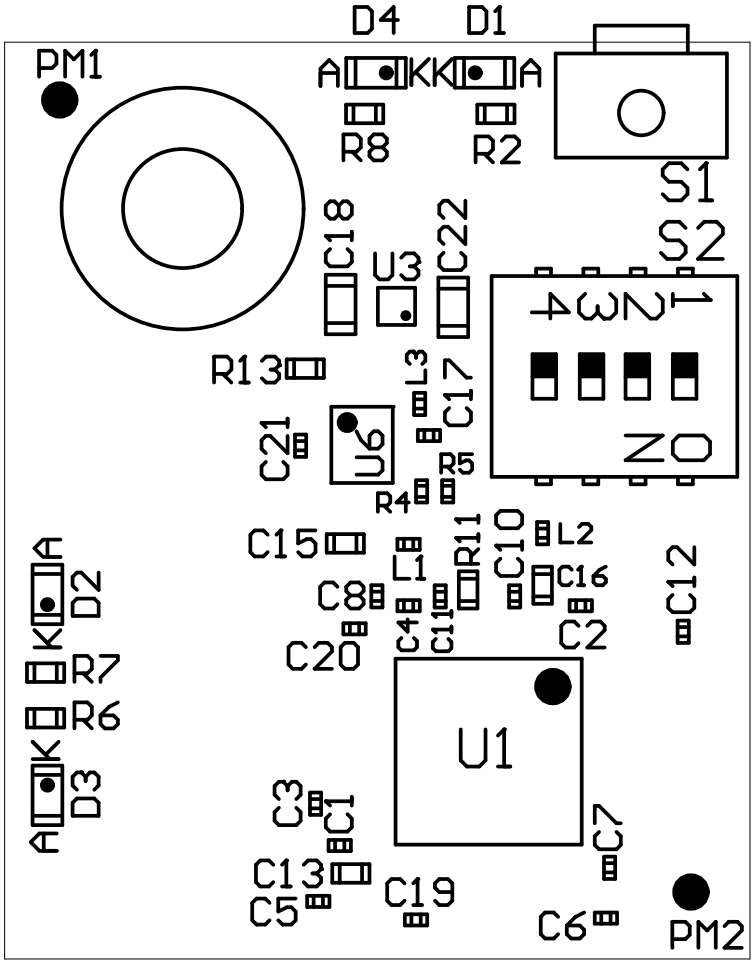
D4
D1
PM1
A
K
K
A
R8
R2
S1
S2
C18
U3
C22
1
2
3
4
ON
R13
L3
C17
C21
U6
R5
R4
C15
R11
C10
L2
A
D2
K
C1
C16
C12
C8
C4
C11
C2
R7
C20
R6
U1
K
D3
A
C3
C1
C7
C13
C5
C19
C6
PM2

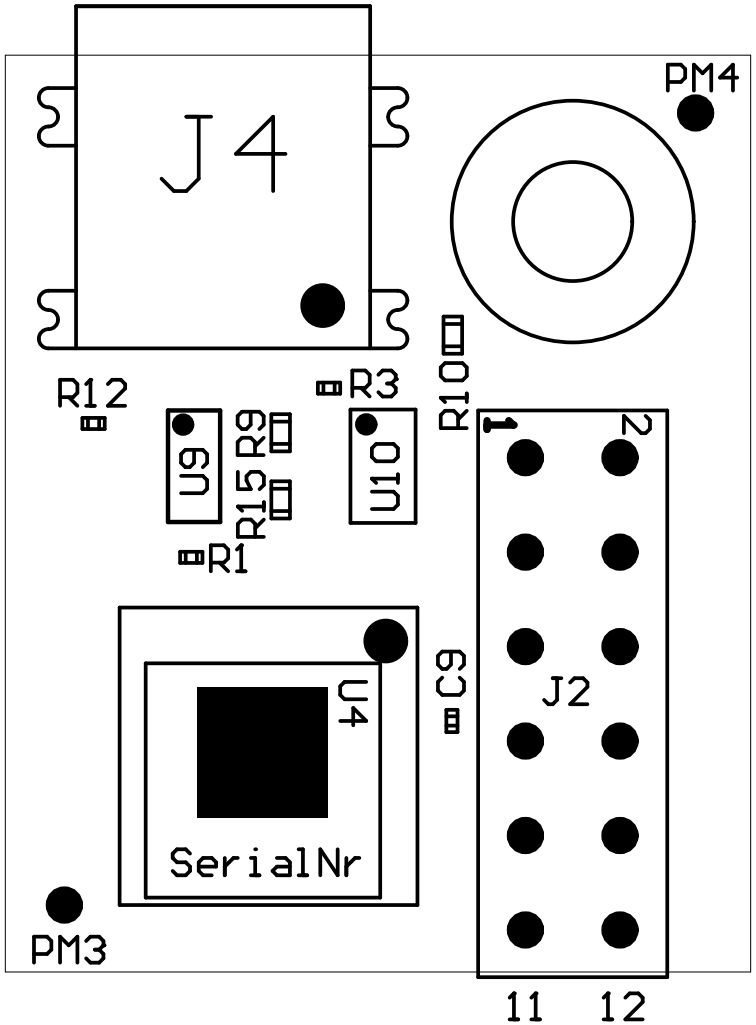
J4
PM4
R12
R3
R10
U9
R9
R15
U10
R1
1
2
J2
C9
U4
SerialNr
PM3
11
12

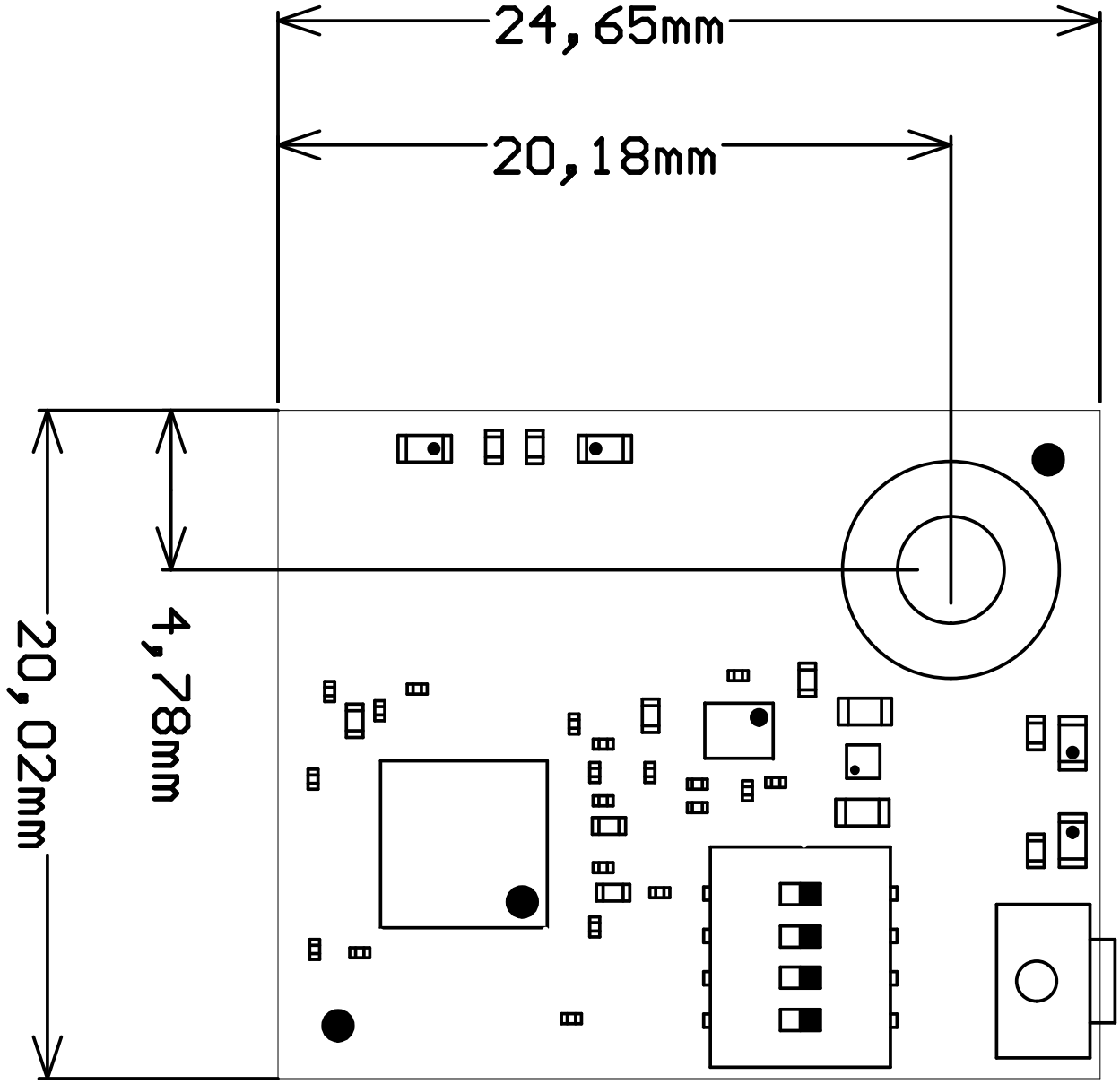
24,65mm
20,18mm
4,78mm
20,02mm

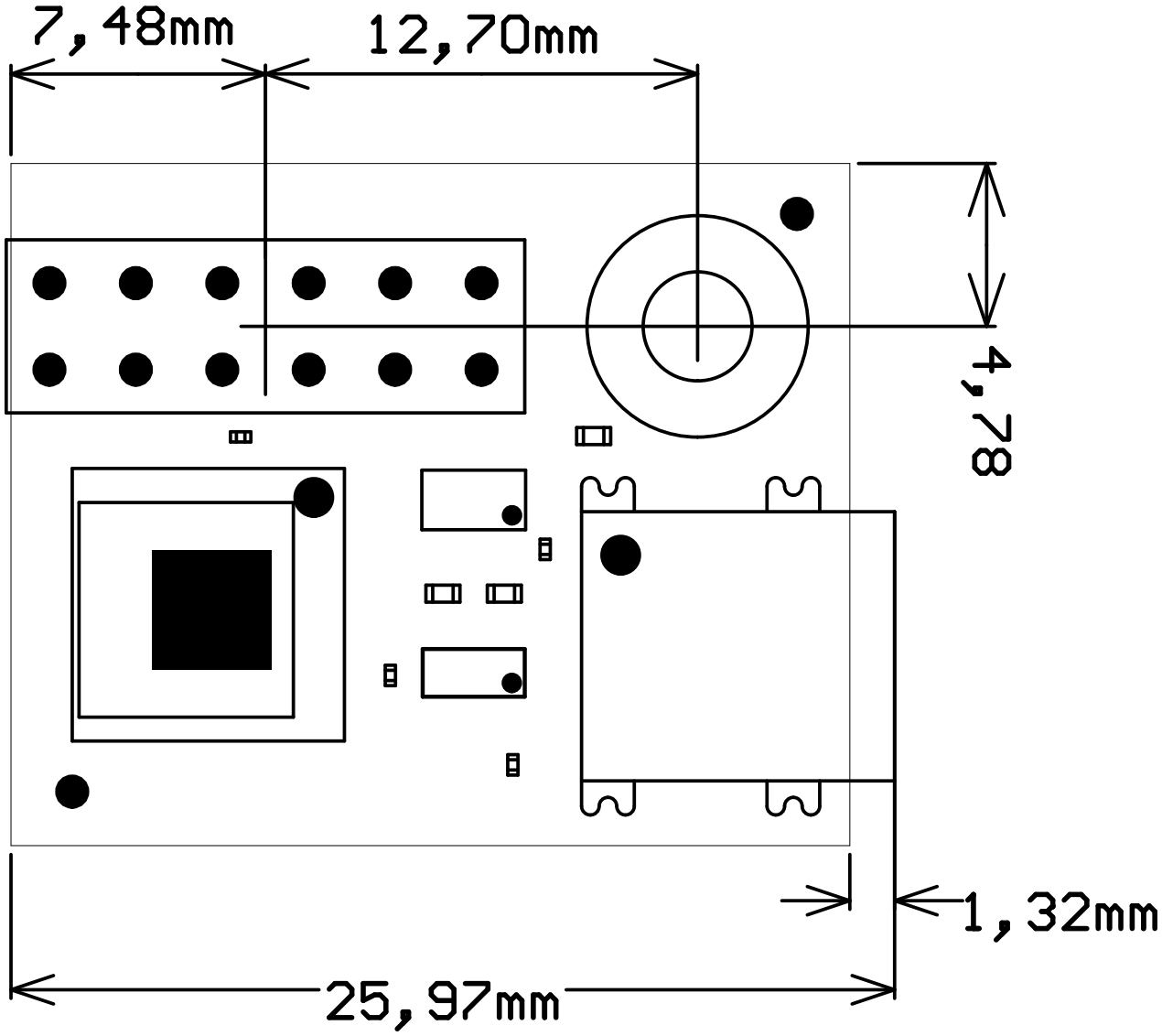
7,48mm
12,70mm
4,78
1,32mm
25,97mm