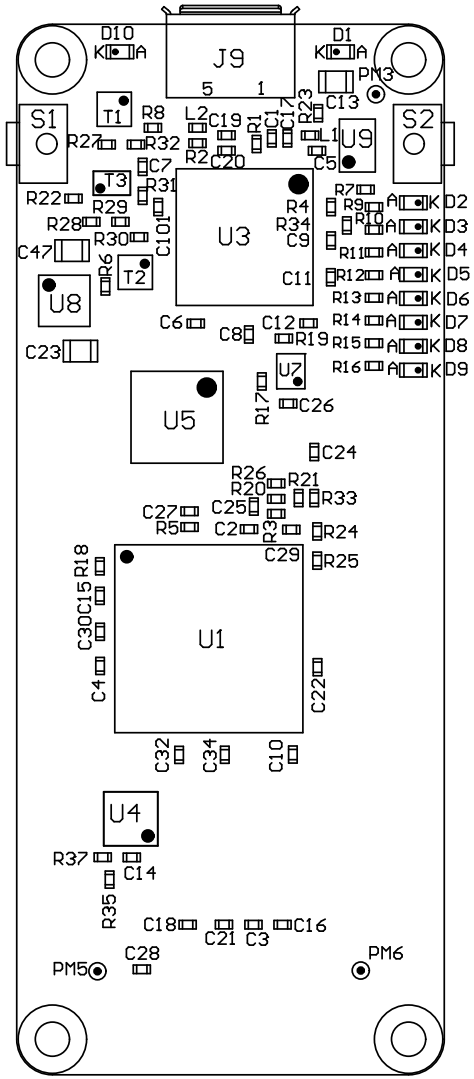

J9
5
1
D10
K
A
D1
K
A
PM3
C13
S1
S2
T1
R8
L2
C19
R1
C1
C17
R23
L1
U9
R27
R32
R2
C20
C5
C7
T3
R31
R22
R29
R28
R30
C101
U3
R4
R34
C9
R7
R9
R10
R11
R12
R13
R14
R15
R16
D2
D3
D4
D5
D6
D7
D8
D9
C47
R6
T2
C11
U8
C6
C8
C12
R19
C23
U7
R17
C26
U5
C24
R26
R20
R21
R33
C27
C25
R5
C2
R3
R24
C29
R25
R18
C15
C30
U1
C4
C22
C32
C34
C10
U4
R37
C14
R35
C18
C21
C3
C16
C28
PM5
PM6

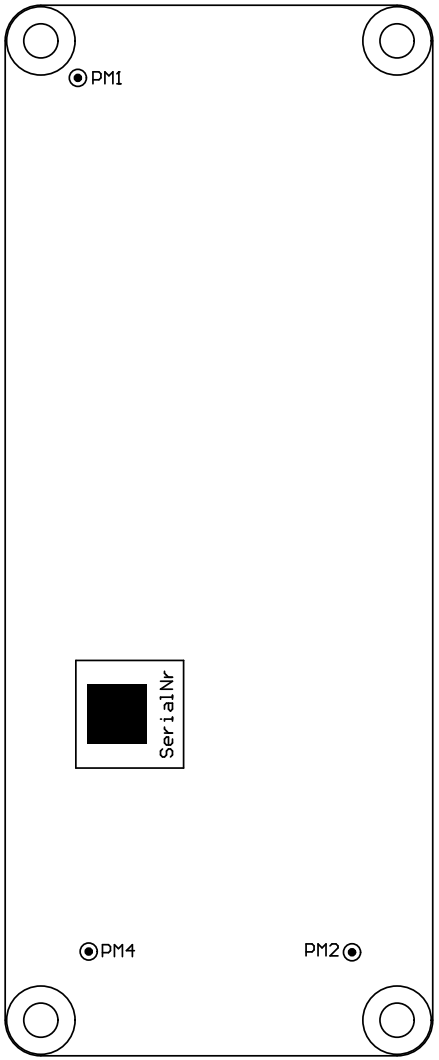
PM1
SerialNr
PM4
PM2

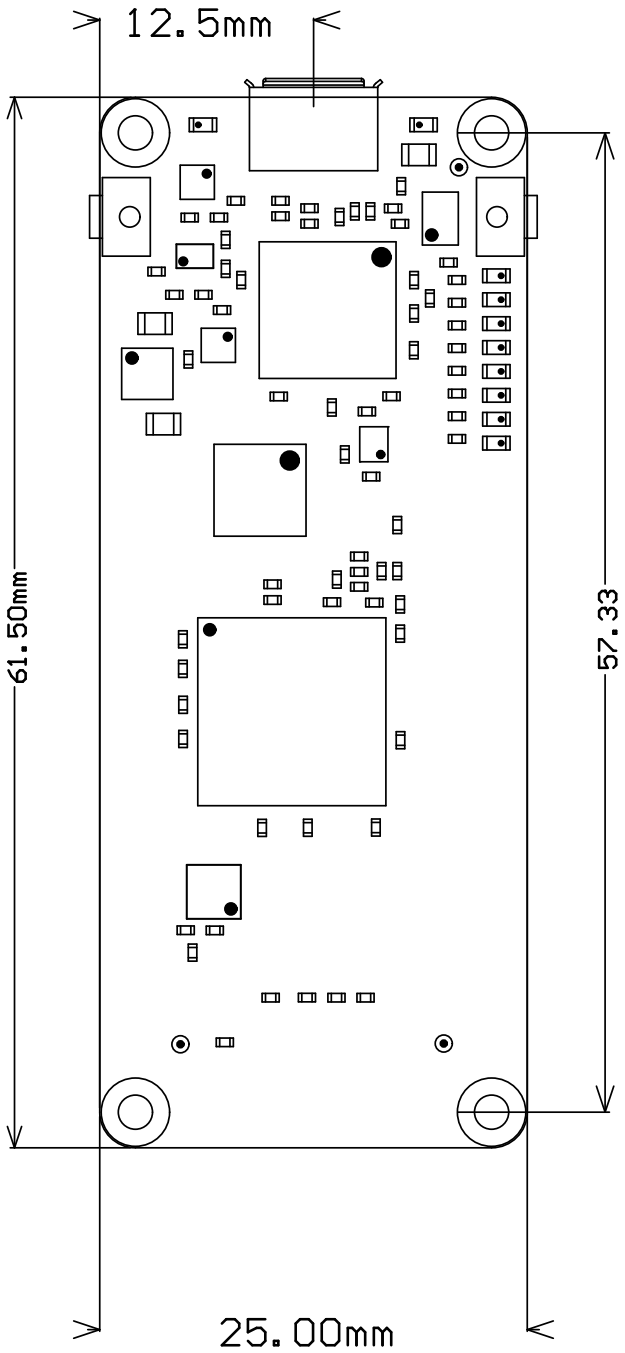
12.5mm
61.50mm
57.33
25.00mm

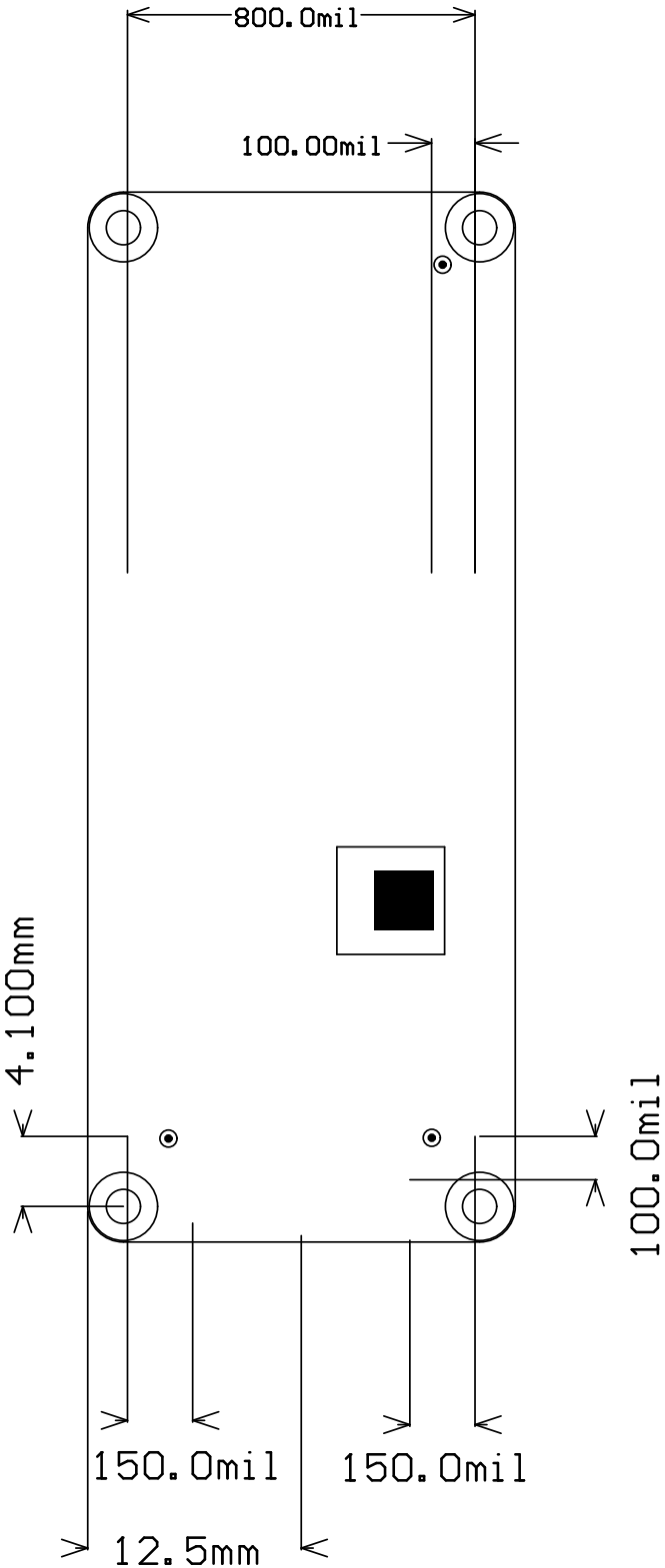
800.0mil
100.00mil
4.100mm
100.0mil
150.0mil
150.0mil
12.5mm