TE0600 TRM

Revision v.10

Exported on 2024-03-12

Online version of this document:

https://wiki.trenz-electronic.de/display/PD/TE0600+TRM

1 Table of Contents

2 Table of Figures

3 Table of Tables

4 Overview

Online version of this manual and other related documents can be found at https://wiki.trenz-electronic.de/display/PD/TE0600 Trenz Electronic GigaBee XC6SLX series are industrial-grade FPGA micromodules integrating a leading-edge Xilinx Spartan-6[1] LX FPGA, Gigabit Ethernet transceiver (physical layer), two independent banks of 16-bit-wide 128/512 MBytes DDR3 SDRAM, 16 MBytes SPI Flash memory for configuration and operation, and powerful switch-mode power supplies for all on-board voltages. A large number of configurable I/Os is provided via robust board-to-board (B2B) connectors.

All this on a tiny footprint, smaller than half a credit card, at the most competitive price.

4.1 Block diagram

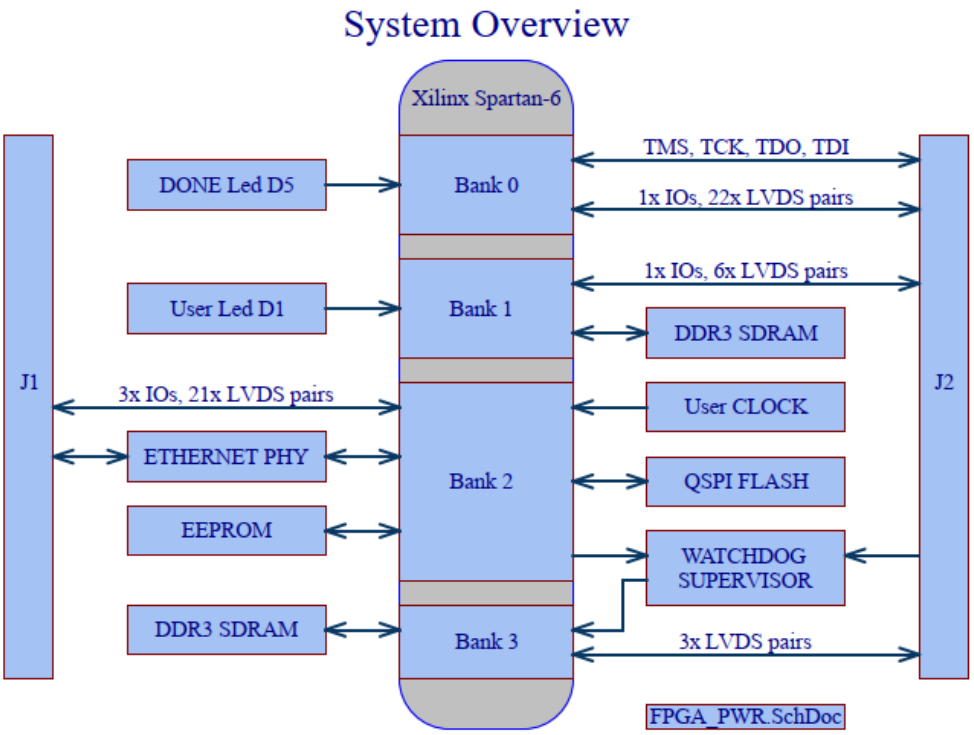

Block diagram of the GigaBee XC6SLX board

1 https://www.xilinx.com/products/silicon-devices/fpga/spartan-6.html

4.2 Main components

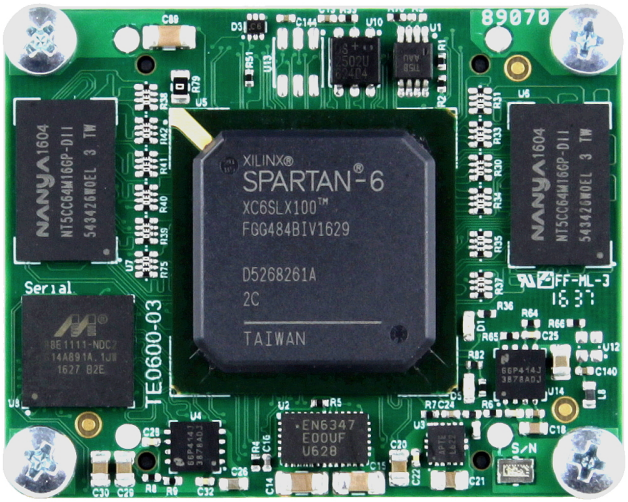

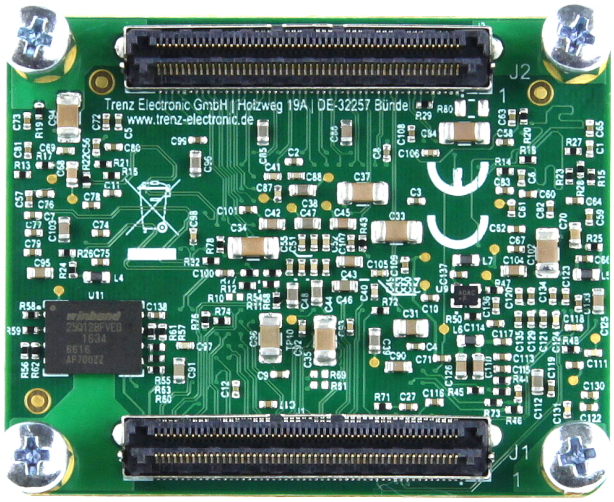

Pictures were photographed from revision 3 and serve for informational purposes only.

Top side:

- Xilinx Spartan-6 LX FPGA
- clock generator
- 10/100/1000 Mbps Ethernet PHY
- protected 1-Wire EEPROM
- DDR3-SDRAM
- DC-DC converters

Bottom side:

- B2B connector J1
- B2B connector J2
- Flash memory

4.3 Key features

- Industrial-grade Xilinx Spartan-6 LX FPGA micromodule (LX45 / LX100 / LX150)
- 10/100/1000 tri-speed Gigabit Ethernet transceiver (PHY)
- 2 x 16-bit-wide 1 Gb (128 MB) or 4 Gb (512 MB) DDR3 SDRAM
- 128 Mb (16 MB) SPI Flash memory (for configuration and operation) accessible through:
- 1 kb protected 1-Wire EEPROM with SHA-1 Engine
- JTAG port (SPI indirect)
- FPGA configuration through:
    - B2B connector
    - JTAG port
    - SPI Flash memory
- Plug-on module with 2 × 100-pin high-speed hermaphroditic strips
- Up to 52 differential, up to 109 single-ended (+ 1 dual-purpose) FPGA I/O pins available on B2B strips
- 6.0 A x 1.2 V power rail
- 3.0 A x 1.5 V power rail
- 2x 1A x 2.5V power rail
- 125 MHz reference clock signal
- Single-ended custom oscillator (option)
- eFUSE bit-stream encryption (LX100 or larger)

- 1 user LED
- Evenly-spread supply pins for good signal integrity

Additional assembly options are available for cost or performance optimization upon request.

4.4 Initial Delivery State

Storage device name	Content	Notes
SPI Flash memory	Blinky Demo	
protected 1-Wire EEPROM	not programmed	

4.5 Power Consumption

Power consumption of GigaBee XC6SLX modules highly depend on the FPGA design implemented. Some typical power consumptions are provided below for the following reference systems:

- Boards – GigaBee XC6SLX 45/100/150
- Base board – TE0603-02
- Power supply – 5 V for baseboard
- Connected Gigabit Ethernet cable

FPGA type	Unconfigured	Configured with Web-server reference design
LX45	0.15 A	0.6 A
LX100	0.17 A	0.5 A
LX150	0.2 A	0.5 A

5 Detailed Description

5.1 Power Supply

The nominal supply voltage of the GigaBee XC6SLX is 3.3 volt. The minimum supply voltage is 3.0 volt. The maximum supply voltage is 3.45 volt.

> **Warning**
>
> Supply voltages beyond the range might affect to device reliability, or even cause permanent damage of the device!

5.2 Board power supply diagram

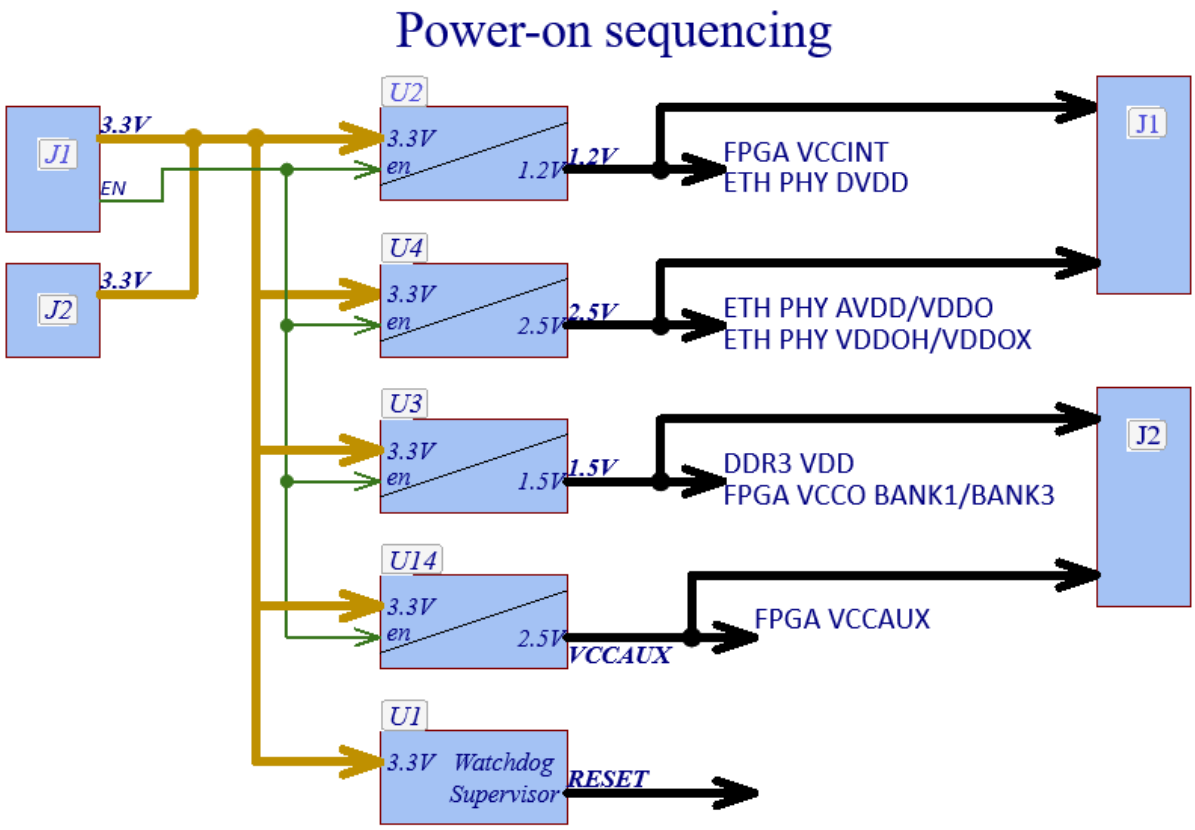

5.2.1 Power Supply Sources

GigaBee XC6SLX board must be powered at least in one of the following two ways:

- through B2B connector J1 (pins 1, 3, 5, 7, 9, 11, 13, 15),
- through B2B connector J2 (pins 2, 4, 6, 8, 10, 12).

We recommend to supply the module with all these 14 pins. When one or more of these pins are not power supplied, it or they can be used as power source for user applications.

Please make sure that your logic design does not draw more RMS current per pin than specified in section *Board-to-board Connectors*.

5.2.2 FPGA banks VCCIO power supply

FPGA VCCIO power options are shown below. Default values for configurable voltages are shown in braces.

Bank	Supply voltage
B0	VCCIO0 (3.3V)
B1	VCCIO1 (1.5V)
B2	VCCIO2 (3.3V)
B3	VCCIO3 (1.5V)

Bank 0 power supply VCCIO0 can be configured by user to 3.3 V, 2.5 V or 1.5 V, see Chapter *VCCIO0 Power Rail*. Banks 1 and 3 VCCIO supply voltage is configured to 1.5 V to communicate with DDR3 SDRAM memory chip.

By special request, modules can be supplied without DDR3 SDRAM chips. Contact Trenz Electronic support for details.

5.2.3 On-board Power Rails

GigaBee XC6SLX has the following power rails on-board.

3.3V Power Rail	It is the main internal power rail and must be supplied from an external power source. It supplies the other following power rails: • 1.2V / 6A on-board high-efficiency switching voltage regulator; • 1.5V / 3A on-board high-efficiency switching voltage regulator; • 2.5V 1A linear voltage regulator; • VCCIO0 power rail (option: if zero-resistor R80 is **not** populated and zero-resistor R79 **is** populated).
1.2V Power Rail	It is converted from the 3.3V rail by a switching voltage regulator and can provide up to 6A to: • FPGA VCCINT power supply pins; • Ethernet PHY; • J1 connector.
1.5V Power Rail	It is converted from the 3.3V rail by a switching voltage regulator and can provide up to 3A to:

	• DDR3 SDRAM; • Vref1 / Vref2 DDR3 SDRAM reference voltages; • FPGA banks 1 and 3 VCCO; • J2 connector.
2.5V Power Rail	It is converted from the 3.3V rail by a linear voltage regulator and can provide up to 1A to: • VCCAUX power rail; • Ethernet physical layer; • J1 connector; • VCCIO0 power rail (option: if zero-resistor R80 **is** populated and zero-resistor R79 is **not** populated).
VCCAUX Power Rail	It is converted from the 3.3V rail by a linear voltage regulator and can provide up to 1A to: • FPGA auxiliary circuits; • J2 connector.
VCCIO0 Power Rail	There are 4 options to supply this rail: 1. from 3.3 V power rail (if zero-resistor R79 **is** populated1 and R80 is **not);** 2. from 2.5 V power rail (if zero-resistor R80 **is** populated and R79 is **not);** 3. from 1.5 V power rail (if zero-resistors R79 and R80 are **not** populated and VCCIO0 connected to 1.5 V power rail); 4. from an external power source through J2 B2B connector (pins 1, 3, 5, 7, 9) (if R79 and R80 are **not** populated) It supplies: • FPGA bank 0 VCCO. Figure below show simplified schematic of power options. Dashed resistors are not populated by default. 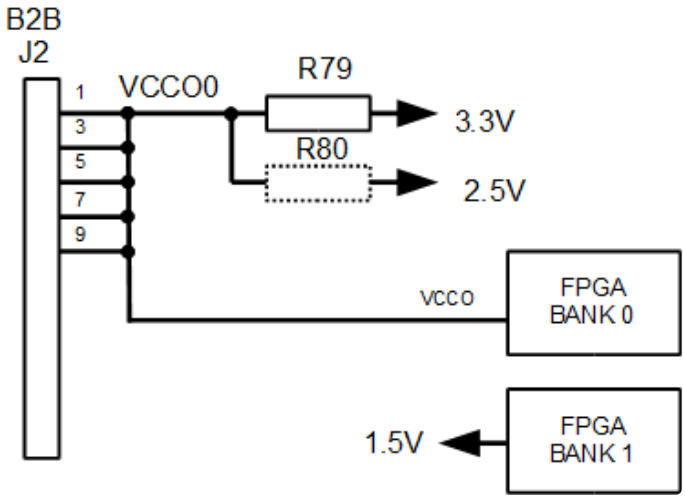

Table below summarizes power rails information.

power-rail name	nominal voltage(V)	maximum current (A)	power source	system supply	user supply
3.3V	3.3	2.4 (3.3 option)	J1, J2	module	J1 (≤1.2 A) J2 (≤1.2 A, ≤2.1 option)
2.5V	2.5	1.0	3.3V	Ethernet	J1 (≤0.3 A) J2 (option)
1.5V	1.5	3.0	3.3V	DDR3 SDRAM VCCO (1+3)	J1 (≤0.3 A)
1.2V	1.2	6.0	3.3V	VCCINT Ethernet	J1 (≤0.6 A)
VCCAUX	2.5	1.0	3.3V	FPGA	J2 (≤0.3 A)
VCCCIO0	1.2, 1.5, 1.8, 2.5, 3.3	0.9	J2 or 2.5V or 3.3V	VCCO (0)	J2 (≤0.9 A)

5.3 Power Supervision

5.3.1 Power-on Reset

During power-on, the /RESET line is first asserted. Thereafter, the supply voltage supervisor monitors the power supply rail 3.3V and keeps the /RESET line active (low) as long as the supply rail remains below the threshold voltage (2.93 volt). An internal timer delays the return of the /RESET line to the inactive state (high) to ensure proper system reset prior to a regular system start-up. The typical delay time td of 200 ms starts after the supply rail has risen above the threshold voltage.

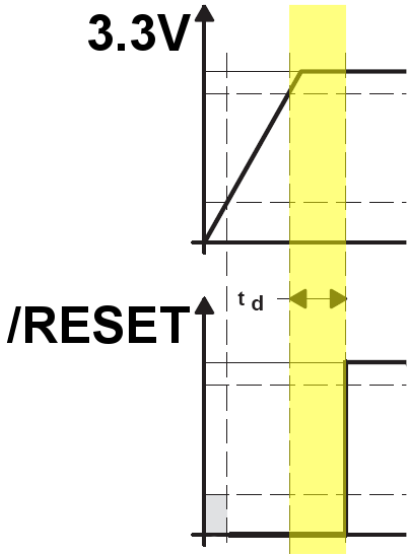

After this delay, the /RESET line is reset (high) and the FPGA configuration can start. When the supply rail voltage drops below the threshold voltage, the /RESET line becomes active (low) again and stays active (low) as long as the rail voltage remains below the threshold voltage (2.93 volt). Once the rail voltage raises again and remains over the threshold voltage for more than the typical delay time td of 200 ms, the /RESET line returns to the inactive state (high) to allow a new system start-up.

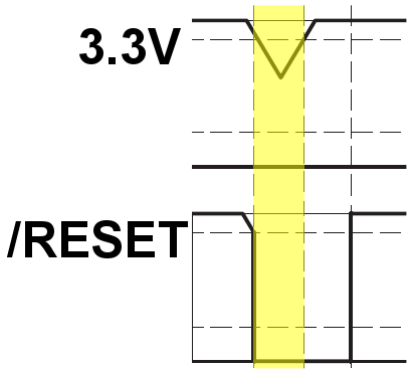

5.3.2 Power Fail

GigaBee XC6SLX integrates a power-fail comparator which can be used for low-battery detection, power-fail warning, or for monitoring a power supply other than the main supply 3.3 V. When the voltage of the PFI (power-fail comparator input, input pin 16 of connector J2) line drops below 1.25 volt, the /PFO (power-fail comparator output, FPGA pin A2, label IO_L83P_3) line becomes active (low). The user application can sense this line to take action. To set a power fail threshold higher than 1.25 volt, the user can implement a simple resistive voltage divider on the carrier board.

5.4 Board-to-board Connectors

These connectors are hermaphroditic. Odd pin numbers on the module are connected to even pin numbers on the baseboard and vice versa.

4 x 5 modules use two or three Samtec Razor Beam LSHM connectors[2] on the bottom side.

2 https://www.samtec.com/technical-specifications/Default.aspx?SeriesMaster=LSHM

- 2 x REF-189016-02 (compatible to LSHM-150-04.0-L-DV-A-S-K-TR), (100 pins, "50" per row)
- 1 x REF-189017-02 (compatible to LSHM-130-04.0-L-DV-A-S-K-TR), (60 pins, "30" per row) (depending on module)

5.4.1 Connector Mating height

When using the same type on baseboard, the mating height is 8mm. Other mating heights are possible by using connectors with a different height

Order number	Connector on baseboard	compatible to	Mating height
23836	REF-189016-01	LSHM-150-02.5-L-DV-A-S-K-TR	6.5 mm
	LSHM-150-03.0-L-DV-A-S-K-TR	LSHM-150-03.0-L-DV-A-S-K-TR	7.0 mm
23838	REF-189016-02	LSHM-150-04.0-L-DV-A-S-K-TR	8.0 mm
	LSHM-150-06.0-L-DV-A-S-K-TR	LSHM-150-06.0-L-DV-A-S-K-TR	10.0mm
26125	REF-189017-01	LSHM-130-02.5-L-DV-A-S-K-TR	6.5 mm
	LSHM-130-03.0-L-DV-A-S-K-TR	LSHM-130-03.0-L-DV-A-S-K-TR	7.0 mm
24903	REF-189017-02	LSHM-130-04.0-L-DV-A-S-K-TR	8.0 mm
	LSHM-130-06.0-L-DV-A-S-K-TR	LSHM-130-06.0-L-DV-A-S-K-TR	10.0mm

Table 1: Connectors.
The module can be manufactured using other connectors upon request.

5.4.2 Connector Speed Ratings

The LSHM connector speed rating depends on the stacking height; please see the following table:

Stacking height	Speed rating
12 mm, Single-Ended	7.5 GHz / 15 Gbps
12 mm, Differential	6.5 GHz / 13 Gbps
5 mm, Single-Ended	11.5 GHz / 23 Gbps
5 mm, Differential	7.0 GHz / 14 Gbps

Table 2: Speed rating.

5.4.3 Current Rating

Current rating of Samtec Razor Beam™ LSHM B2B connectors is 2.0A per pin (2 adjacent pins powered).

5.4.4 Connector Mechanical Ratings

- Shock: 100G, 6 ms Sine
- Vibration: 7.5G random, 2 hours per axis, 3 axes total

5.5 EPROM

GigaBee XC6SLX board contains a Maxim DS2502-E48 node address chip with factory-programmed valid MAC-48 address and 768 bits of OTP-EPROM memory for user data.

Address chip provide convenient data access through 1-Wire interface up to 16.3 kbps (FPGA pin T11).

More information can be found in the Maxim DS2502-E48 product overwiew.

Additional 1Kb protected 1-Wire EEPROM with SHA-1 engine DS2432 accessible via the same line.

More information can be found at the Maxim DS2432 product page.

5.6 DDR3 SDRAM Memory

The board contains two 1 Gb (128 MB) or 4 Gb (512 MB) DDR3 SDRAM chips. Data width of each chip is 16 bit. DDR3 memory connected to FPGA bank 1 and FPGA bank 3. Spartan-6 Memory controller Blocks operations can be merged to implement effective 32-bit memory interface. Refer *Xilinx XAPP496* for detailed information.

5.7 Flash Memory

GigaBee XC6SLX board contains 128 Mb (16 MB) serial flash memory chip Winbond W25Q128FV (W25Q128BV till REV 02) (U11). This serial flash chip can operate as general SPI memory mode and in double or quad modes. Usage of dual and quad modes increase bandwidth up to 40 MB/s.

For more information see Winbond W25Q128JVEIQ (W25Q128BV or W25Q128FV in old revisions) product overview.

Flash can be programmed in several ways:

- Direct SPI programming via J1 connector.
- Indirect SPI programming via FPGA pins, controlled by JTAG.
- Direct SPI programming by FPGA, using SPI core.

Serial flash is connected to FPGA bank 2 and B2B connector J1; used pins are listed in the table below.

Flash signal	FPGA pin	J1 pin
/CS	T5	87
CLK	Y21	91
DI(IO0)	AB20	95
DO(IO1)	AA20	93
/WP(IO2)	U14	99
/HOLD(IO3)	U13	97

Serial flash signals connection

5.8 Ethernet

The board contains a Marvell Alaska Ethernet PHY chip (88E1111) operating at 10/100/1000 Mb/s. The board supports GMII interface mode with the FPGA. Configuration details:

- PHY address – 00111
- Do not advertise the PAUSE bit
- Auto Neg
- Advertise all caps
- Prefer slave
- Auto crossover
- 125clk - enabled
- GMII to copper
- Fiber auto-detect - disabled
- Sleep mode - disabled

Ethernet signals from PHY are connected to B2B connector J1. To use Ethernet in your design, GigaBee module should be connected to the carrier board, which have Ethernet magnetics and RJ45 connector. TE0603 carrier board can be used to access Ethernet capabilities of GigaBee XC6SLX series modules.

Caution

For correct operation of the Marvell PHY it is required that PHY Reset pin sees valid low level each time power is applied and also during any brownout situations where system Power is removed for short time, but some pins are not at valid logic levels.
Solutions:

1. if GbE PHY is not used PHY reset pin can be tied off to GND

2. if PLL is used from PHY clock, then PLL "locked" output can be used to reset PHY - as long PLL is not locked, it will keep PHY in reset
3. Reset pulse generation circuit clocked from FPGA internal configuration clock, this circuit can force PHY reset pin to low when external clock from PHY is not available
4. any custom Reset circuit that is guaranteed to drive PHY reset to low level at least once after FPGA configuration when PHY clock is not running.
5. any user logic that is guaranteed to drive PHY reset low after FPGA configuration (without using PHY clock).

Explanation: Marvell PHY samples the MODE pins ONLY when it sees low level on PHY reset input, it does not sample those pins during short power off situations (if the reset pin holds high level because of pin capacitance and high impedance of the pins)! So it is possible that the PHY mode is reset, but the mode pins are not sampled again - this yields in mode setting where 125MHz reference clock from PHY is not available.

5.9 Oscillators

The module has one 25 MHz oscillator for Ethernet PHY (U9). Ethernet PHY provides clock multiplication and resulting 125 MHz clock acts as a system and user clock for the FPGA (FPGA input pin AA12).

Caution

Note: For correct generation start, PHY should receive reset pulse. Recommended way to do it it's to connect PHY reset signal (ETHERNET_PHY_RST_N) to LOCKED output of corresponding DCM (DCM which use 125 MHz from PHY).

The module also provides additional 3.3 V single-ended oscillator (U12) which can be used as a system and user clock for the FPGA (FPGA input pin Y13).

5.10 User LED

The module contains one user active-low LED connected to FPGA output pin T20. To access more LEDs, use a carrier board and drive FPGA signals connected to B2B connectors. As LED connected to FPGA bank with configurable VCCIO to light LED FPGA pin should in '0' (low) state. To disable LED FPGA pin should be in 'Z' (High impedance).

5.11 Watchdog

GigaBee XS6LX has a watchdog timer that is periodically triggered by a positive or negative transition of the WDI (watchdog input) line (FPGA pin V9). When the supervising system fails to re-trigger the watchdog circuit within the time-out interval (min 1.1 s, typ 1.6 s, max 2.3 s), the /WDO (watchdog output) line becomes active (low). This event also re-initializes the watchdog timer.

If zero-resistors R2 is not assembled, the watchdog is disabled (alternate assembly).

If zero-resistors R2 is assembled, the watchdog can be enabled (standard assembly). In this case there is still two options:

To **enable** the watchdog, after module power-up, drive the WDI signal to generate at least one transition (no matter positive or negative).

To keep watchdog **disabled,** set WDI FPGA signal output to high-impedance. One way to reach this goal is to leave FPGA pin V9 (label IO_L50N_2) undeclared in user constrains file (UCF) and set “unused IOB pins” to “float” in the Xilinx Project Navigator options, see Fig. below.

(Project properties > Configuration options > Unused IOB Pins > Float).

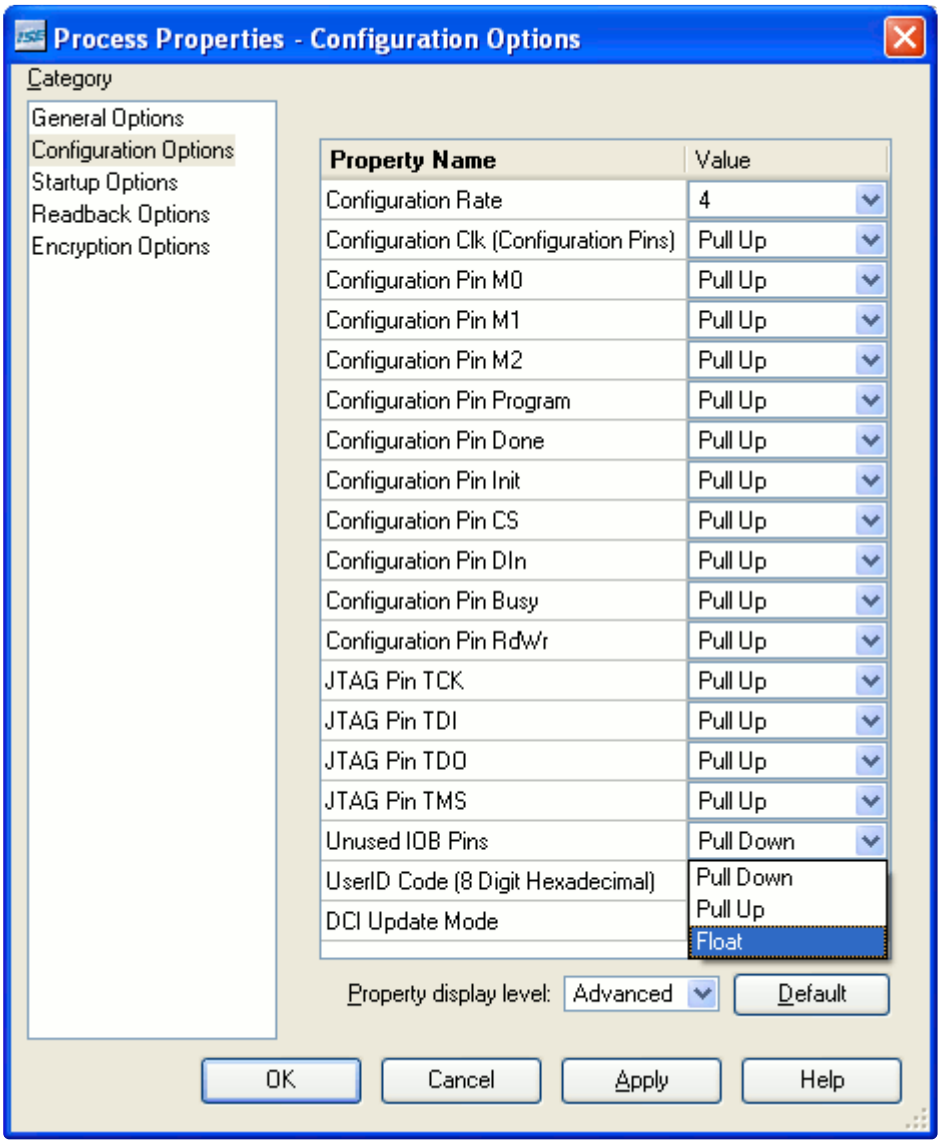

Unused IOB Pins option selection.

In the standard assembly, the /WDO (watchdog output) line is left unconnected1 and the only possibility to reset the module is by driving the /MR (master reset) line active (low) through pin 18 of connector J2.

In the alternate assembly, the /WDO (watchdog output) line is connected through zero-resistor R3 to /MR (master reset) line.

Caution

If alternate assembly is used, pin 18 of connector J2 must be left unconnected.

6 Configuration Options

The FPGA on GigaBee XC6SLX board can be configured by means of the following devices:

- Xilinx download cable (JTAG)
- SPI Flash memory

6.1 JTAG Configuration

The FPGA can be configured through the JTAG interface. JTAG signals are connected to B2B connector J2. When GigaBee XC6SLX board is used with the TE0603 carrier board, the JTAG interface can be accessed via connectors J5 and J6 on the carrier board.

6.2 Flash Configuration

Default configuration option for FPGA is “Master Serial/SPI”. The bit-stream for the FPGA is stored in a serial Flash chip (U11). See chapter 2.7 Flash Memory for additional information.

6.3 eFUSE Programming

`eFUSE programming feature is not directly supported by GigaBee XC6SLX modules, but it is possible to use it. To program eFUSE, please follow the steps below:`

- Connect VCCAUX to 3.3V power rail.
  On TE0603 it can be done by connecting J5 pin 2 or J6 “VREF” (VCCAUX) to J1 any pin from 1,2,3,4 (3.3V). See Figure below.
- Program eFUSE using JTAG cable and iMPACT software.
- Remove power supply connections to VCCAUX

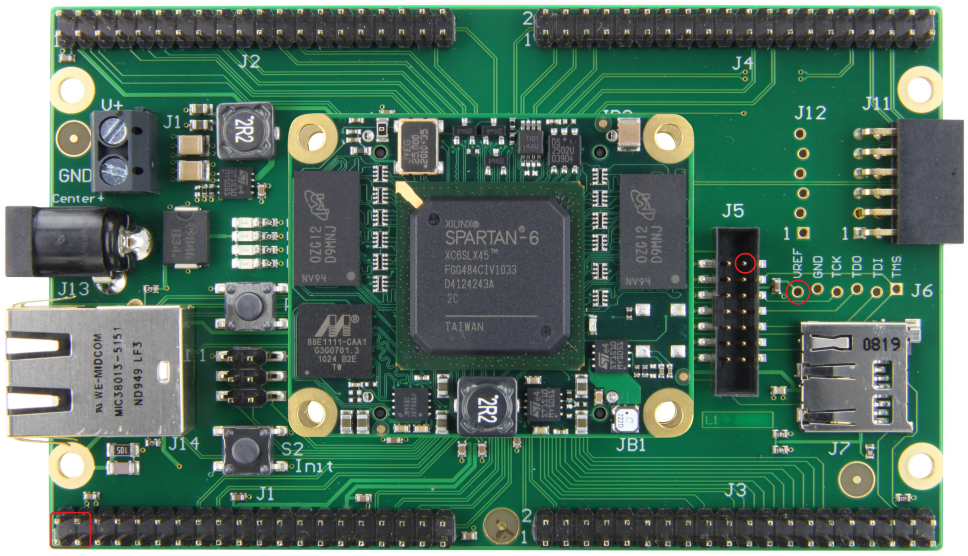

7 B2B Connectors Pin Descriptions

This section describes how the various pins on B2B connectors J1 and J2 connects to TE0600 on-board components. There are five main signal types connected to B2B connectors:

- FPGA users signals;
- FPGA system signals;
- Power signals;
- Ethernet PHY signals;
- Other system signals.

FPGA Bank	Single-ended	Differential	Total	VCCIO
Bank 0	1	22	45	VCCIO0 (3.3V)
Bank 1	1	6	13	VCCIO1 (1.5V)
Bank 2	3	21	45	VCCIO2 (3.3V)
Bank 3	0	3	6	VCCIO3 (1.5V)
	5	52	109	

B2B signals count

7.1 Pin Labeling

FPGA user signals connected to B2B connectors are characterized by the "B2B_Bx_Lyy_p" naming convention, where:

- B2B defines a "FPGA to B2B" signal type;
- Bx defines the FPGA bank (x = bank number);
- Lyy defines a differential pair or signal number (yy = pair number);
- p defines a differential signal polarity (P = positive, N = negative); single ended signals do not have this field.

Ethernet PHY signals use "PHY_name" naming conversions where "PHY" defines signal type "PHY to B2B" and "name" is PHY signal name.

Remaining signals use custom names.

7.2 Pin Numbering

Note that GigaBee XC6SLX have hermaphroditic B2B connectors. A feature of hermaphroditic connector numbering is that connected signal numbers don't match. Odd signals on module connect to even signals on baseboard. For example module signal 1 to baseboard signal 2, module signal 2 to baseboard signal 1, module signal 3 to baseboard signal 4 and so on.

7.3 Pin Types

Most pins of B2B connectors J1 and J2 are general-purpose, user-defined I/O pins (GPIOs). There are, however, up to 8 different functional types of pins on the TE0600, as outlined in Table below. In pin-out tables Table 11 and Table 12, the individual pins are colour-coded according to pin type as in Table below.

type colour code	description
DIO	Unrestricted, general-purpose differential user-I/O pin.
SIO	Unrestricted, general-purpose user-I/O pin.
CONFIG	Dedicated configuration signals.
PWRMGMT	Control and status signals for the power-saving Suspend mode.
JTAG	Dedicated JTAG signals.
GND	Dedicated ground pin. All must be connected.
TE	Trenz Electronic specific pin type. See the description of each pin in the user manual for additional information on the corresponding signals.
POW	Power signals.
SPI	SPI signals.
PHY	Ethernet PHY signals.

TE0600 pin types

type colour code	description
DIO	Unrestricted, general-purpose differential user-I/O pin.
SIO	Unrestricted, general-purpose user-I/O pin.
CONFIG	Dedicated configuration signals.
PWRMGMT	Control and status signals for the power-saving Suspend mode.
JTAG	Dedicated JTAG signals.
GND	Dedicated ground pin. All must be connected.
TE	Trenz Electronic specific pin type. See the description of each pin in the user manual for additional information on the corresponding signals.
POW	Power signals.

SPI	SPI signals.
PHY	Ethernet PHY signals.

Note that some of Spartan-6 I/O types are partially compatible, so pins of compatible types can be used as inputs for signal of other type. For example pins from FPGA bank with 1.5V VCCO (IOSTANDARD = LVCMOS15) can be used as inputs for 1.2V, 1.8V, 2.5V and 3.3V signals.

See “Spartan-6 FPGA SelectIO Resources” page 38 for detailed information.

7.4 External Bank 2 differential clock connection

TE0600 module have optional connection to FPGA bank 2 differential clock input pins. To provide connection from B2B_B2_L41_P signal to Y13 FPGA pin, zero-resistor R69 should be soldered. To provide connection B2B_B2_L41_N signal to AB13 FPGA pin, zero-resistor R81 should be soldered. Note that in this case optional user oscillator U13 can't be used.

7.5 J1 Pin-out

J1 pin	Net	Type	FPGA pin	Net Length	J1 pin	Net	Type	FPGA pin	Net Leng
1	3.3V	POW	-	-	2	GND	GND	-	-
3	3.3V	POW	-	-	4	PHY_MDI0_P	PHY	-	-
5	3.3V	POW	-	-	6	PHY_MDI0_N	PHY	-	-
7	3.3V	POW	-	-	8	GND	GND	-	-
9	3.3V	POW	-	-	10	PHY_MDI1_P	PHY	-	-
11	3.3V	POW	-	-	12	PHY_MDI1_N	PHY	-	-
13	3.3V	POW	-	-	14	PHY_AVDD	PHY	-	-
15	3.3V	POW	-	-	16	PHY_MDI2_P	PHY	-	-
17	PHY_L10	PHY	-	-	18	PHY_MDI2_N	PHY	-	-
19	PHY_L100	PHY	-	-	20	GND	GND	-	-
21	PHY_L1000	PHY	-	-	22	PHY_MDI3_P	PHY	-	-
23	PHY_DUP	PHY	-	-	24	PHY_MDI3_N	PHY	-	-
25	PHY_LED_TX	PHY	-	-	26	GND	GND	-	-
27	PHY_LED_RX	PHY	-	-	28	EN	TE	-	-
29	GND	GND	-	-	30	INIT	CONFIG	T6	-
31	B2B_B2_L57_N	DIO	AB4	8.66mm	32	B2B_B2_L32_N	SIO	AB11	8.12mm
33	B2B_B2_L57_P	DIO	AA4	9.84mm	34	GND	GND	-	-
35	B2B_B2_L49_N	DIO	AB6	8.66mm	36	B2B_B2_L60_P	DIO	T7	9.96mm
37	B2B_B2_L49_P	DIO	AA6	9.58mm	38	B2B_B2_L60_N	DIO	R7	11.16mm
39	2.5V	POW	-	-	40	B2B_B2_L59_N	DIO	R8	11.42mm
41	1.2V	POW	-	-	42	B2B_B2_L59_P	DIO	R9	11.36mm
43	1.2V	POW	-	-	44	GND	GND	-	-
45	B2B_B2_L48_N	DIO	AB7	9.98mm	46	B2B_B2_L44_N	DIO	Y10	11.34mm
47	B2B_B2_L48_P	DIO	Y7	10.98mm	48	B2B_B2_L44_P	DIO	W10	10.21mm
49	B2B_B2_L45_N	DIO	AB8	10.60mm	50	B2B_B2_L42_N	DIO	W11	7.52mm
51	B2B_B2_L45_P	DIO	AA8	11.053mm	52	B2B_B2_L42_P	DIO	V11	8.36mm
53	GND	GND	-	-	54	GND	GND	-	-
55	B2B_B2_L43_N	DIO	AB9	13.75mm	56	B2B_B2_L18_P	DIO	V13	7.94mm
57	B2B_B2_L43_P	DIO	Y9	12.97mm	58	B2B_B2_L18_N	DIO	W13	6.96mm
59	B2B_B2_L41_N	DIO	AB10, AB13	10.33mm	60	B2B_B2_L8_N	DIO	U16	9.92mm
61	B2B_B2_L41_P	DIO	AA10, Y13	11.01mm	62	B2B_B2_L8_P	DIO	U17	9.94mm
63	GND	GND	-	-	64	GND	GND	-	-
65	B2B_B2_L21_P	DIO	Y15	13.12mm	66	B2B_B2_L11_P	DIO	V17	8.31mm
67	B2B_B2_L21_N	DIO	AB15	12.37mm	68	B2B_B2_L11_N	DIO	W17	7.29mm
69	B2B_B2_L15_P	DIO	Y17	14.20mm	70	B2B_B2_L6_P	DIO	W18	7.40mm
71	B2B_B2_L15_N	DIO	AB17	13.77mm	72	B2B_B2_L6_N	DIO	Y18	6.94mm
73	GND	GND	-	-	74	GND	GND	-	-
75	B2B_B2_L31_N	SIO	AB12	12.30mm	76	B2B_B2_L5_P	DIO	Y19	6.18mm
77	SUSPEND	SYS	N15	19.23mm	78	B2B_B2_L5_N	DIO	AB19	6.12mm
79	VBATT	CONFIG	R17	-	80	B2B_B2_L9_N	DIO	V18	8.43mm
81	VFS	CONFIG	P16	-	82	B2B_B2_L9_P	DIO	V19	8.36mm
83	RFUSE	CONFIG	P15	-	84	GND	GND	-	-
85	AWAKE	SYS	T19	14.15mm	86	B2B_B2_L4_N	DIO	T17	11.88mm
87	CSO_B	SPI	T5	-	88	B2B_B2_L4_P	DIO	T18	11.96mm
89	GND	GND	-	-	90	GND	GND	-	-
91	CCLK	SPI	Y21	-	92	B2B_B2_L29_N	SIO	Y12	13.58mm
93	MISO	SPI	AA20	-	94	B2B_B2_L10_N	DIO	R15	17.01mm
95	MOSI	SPI	AB20	-	96	B2B_B2_L10_P	DIO	R16	16.97mm
97	MISO3	SPI	U13	-	98	B2B_B2_L2_N	DIO	AB21	5.06mm
99	MISO2	SPI	U14	-	100	B2B_B2_L2_P	DIO	AA21	6.19mm

J1 pin-out

J1 pin	Net	Type	FPGA pin	Net Length	J1 pin	Net	Type	FPGA pin	Net Length

1	3.3V	POW	-	-	2	GND	GND	-	-
3	3.3V	POW	-	-	4	PHY_MDI0_P	PHY	-	-
5	3.3V	POW	-	-	6	PHY_MDI0_N	PHY	-	-
7	3.3V	POW	-	-	8	GND	GND	-	-
9	3.3V	POW	-	-	10	PHY_MDI1_P	PHY	-	-
11	3.3V	POW	-	-	12	PHY_MDI1_N	PHY	-	-
13	3.3V	POW	-	-	14	PHY_AVDD	PHY	-	-
15	3.3V	POW	-	-	16	PHY_MDI2_P	PHY	-	-
17	PHY_L10	PHY	-	-	18	PHY_MDI2_N	PHY	-	-
19	PHY_L100	PHY	-	-	20	GND	GND	-	-
21	PHY_L1000	PHY	-	-	22	PHY_MDI3_P	PHY	-	-
23	PHY_DUP	PHY	-	-	24	PHY_MDI3_N	PHY	-	-
25	PHY_LED_TX	PHY	-	-	26	GND	GND	-	-
27	PHY_LED_RX	PHY	-	-	28	EN	TE	-	-
29	GND	GND	-	-	30	INIT	CONFIG	T6	-

31	B2B_B2_L57_N	DIO	AB4	12.3056 mm	32	B2B_B2_L32_N	SIO	AB11	9.2307 mm
33	B2B_B2_L57_P	DIO	AA4	12.3446 mm	34	GND	GND	-	-
35	B2B_B2_L49_N	DIO	AB6	10.9076 mm	36	B2B_B2_L60_P	DIO	T7	12.8674 mm
37	B2B_B2_L49_P	DIO	AA6	11.4038 mm	38	B2B_B2_L60_N	DIO	R7	13.3583 mm
39	2.5V	POW	-	-	40	B2B_B2_L59_N	DIO	R8	13.4941 mm
41	1.2V	POW	-	-	42	B2B_B2_L59_P	DIO	R9	13.4584 mm
43	1.2V	POW	-	-	44	GND	GND	-	-
45	B2B_B2_L48_N	DIO	AB7	14.447 mm	46	B2B_B2_L44_N	DIO	Y10	13.4331 mm
47	B2B_B2_L48_P	DIO	Y7	14.6069 mm	48	B2B_B2_L44_P	DIO	W10	13.0478 mm
49	B2B_B2_L45_N	DIO	AB8	11.3986 mm	50	B2B_B2_L42_N	DIO	W11	9.889mm
51	B2B_B2_L45_P	DIO	AA8	11.642 mm	52	B2B_B2_L42_P	DIO	V11	10.2701 mm
53	GND	GND	-	-	54	GND	GND	-	-
55	B2B_B2_L43_N	DIO	AB9	13.1392 mm	56	B2B_B2_L18_P	DIO	V13	10.5384 mm
57	B2B_B2_L43_P	DIO	Y9	13.5123 mm	58	B2B_B2_L18_N	DIO	W13	10.0455 mm
59	B2B_B2_L41_N	DIO	AB10, AB13	15.7999 mm	60	B2B_B2_L8_N	DIO	U16	12.2993 mm

61	B2B_B2_L41_P	DIO	AA10, Y13	16.1771 mm	62	B2B_B2_L8_P	DIO	U17	12.2993 mm
63	GND	GND	-	-	64	GND	GND	-	-
65	B2B_B2_L21_P	DIO	Y15	14.8399 mm	66	B2B_B2_L11_P	DIO	V17	10.5343 mm
67	B2B_B2_L21_N	DIO	AB15	14.6254 mm	68	B2B_B2_L11_N	DIO	W17	10.1532 mm
69	B2B_B2_L15_P	DIO	Y17	13.2958 mm	70	B2B_B2_L6_P	DIO	W18	9.5851 mm
71	B2B_B2_L15_N	DIO	AB17	13.1454 mm	72	B2B_B2_L6_N	DIO	Y18	9.1811 mm
73	GND	GND	-	-	74	GND	GND	-	-
75	B2B_B2_L31_N	SIO	AB12	14.3436 mm	76	B2B_B2_L5_P	DIO	Y19	8.398mm
77	SUSPEND	SYS	N15	21.1709 mm	78	B2B_B2_L5_N	DIO	AB19	8.3535 mm
79	VBATT	CONFIG	R17	-	80	B2B_B2_L9_N	DIO	V18	10.2621 mm
81	VFS	CONFIG	P16	-	82	B2B_B2_L9_P	DIO	V19	10.1752 mm
83	RFUSE	CONFIG	P15	-	84	GND	GND	-	-
85	AWAKE	SYS	T19	16.1634 mm	86	B2B_B2_L4_N	DIO	T17	13.4321 mm
87	CSO_B	SPI	T5	-	88	B2B_B2_L4_P	DIO	T18	13.8014 mm
89	GND	GND	-	-	90	GND	GND	-	-

91	CCLK	SPI	Y21	-	92	B2B_B2_L29_N	SIO	Y12	15.9734 mm
93	MISO	SPI	AA20	-	94	B2B_B2_L10_N	DIO	R15	18.4735 mm
95	MOSI	SPI	AB20	-	96	B2B_B2_L10_P	DIO	R16	18.3045 mm
97	MISO3	SPI	U13	-	98	B2B_B2_L2_N	DIO	AB21	8.425mm
99	MISO2	SPI	U14	-	100	B2B_B2_L2_P	DIO	AA21	8.4085 mm

7.6 J2 Pin-out

J2 pin	Net	Type	FPGA pin	Net Length	J2 pin	Net	Type	FPGA pin	Net Length
1	VCCIO0	POW	-	-	2	3.3V	POW	-	-
3	VCCIO0	POW	-	-	4	3.3V	POW	-	-
5	VCCIO0	POW	-	-	6	3.3V	POW	-	-
7	VCCIO0	POW	-	-	8	3.3V	POW	-	-
9	VCCIO0	POW	-	-	10	3.3V	POW	-	-
11	B2B_PROGB	CONFIG	-	-	12	3.3V	POW	-	-
13	HSWAPEN	CONFIG	A3	-	14	B2B_B0_L1	SIO	A4	9.017mm
15	B2B_B3_L60_N	DIO	B1	5.44mm	16	PFI	TE	-	-
17	B2B_B3_L60_P	DIO	B2	5.27mm	18	/MR	TE	-	-
19	1.5V	POW	-	-	20	GND	GND	-	-
21	B2B_B3_L9_N	DIO	T3	19.36mm	22	B2B_B0_L2_P	DIO	C5	10.17mm
23	B2B_B3_L9_P	DIO	T4	18.76mm	24	B2B_B0_L2_N	DIO	A5	9.60mm
25	B2B_B0_L3_P	DIO	D6	6.76mm	26	B2B_B0_L4_N	DIO	A6	7.65mm
27	B2B_B0_L3_N	DIO	C6	5.66mm	28	B2B_B0_L4_P	DIO	B6	8.71mm
29	GND	GND	-	-	30	GND	GND	-	-
31	B2B_B3_L59_P	DIO	J7	11.90mm	32	B2B_B0_L5_N	DIO	A7	8.59mm
33	B2B_B3_L59_N	DIO	H8	11.71mm	34	B2B_B0_L5_P	DIO	C7	9.54mm
35	B2B_B0_L32_P	DIO	D7	6.93mm	36	B2B_B0_L6_N	DIO	A8	7.42mm
37	B2B_B0_L32_N	DIO	D8	6.87mm	38	B2B_B0_L6_P	DIO	B8	8.43mm
39	GND	GND	-	-	40	GND	GND	-	-
41	B2B_B0_L7_N	DIO	C8	6.62mm	42	B2B_B0_L8_N	DIO	A9	9.28mm
43	B2B_B0_L7_P	DIO	D9	6.71mm	44	B2B_B0_L8_P	DIO	C9	9.92mm
45	B2B_B0_L33_N	DIO	C10	5.66mm	46	B2B_B0_L34_N	DIO	A10	7.58mm
47	B2B_B0_L33_P	DIO	D10	6.76mm	48	B2B_B0_L34_P	DIO	B10	8.60mm
49	GND	GND	-	-	50	GND	GND	-	-
51	B2B_B0_L36_P	DIO	D11	6.76mm	52	B2B_B0_L35_N	DIO	A11	8.89mm
53	B2B_B0_L36_N	DIO	C12	5.87mm	54	B2B_B0_L35_P	DIO	C11	9.92mm
55	B2B_B0_L49_P	DIO	D14	6.96mm	56	B2B_B0_L37_N	DIO	A12	7.52mm
57	B2B_B0_L49_N	DIO	C14	5.96mm	58	B2B_B0_L37_P	DIO	B12	8.74mm
59	GND	GND	-	-	60	GND	GND	-	-
61	B2B_B0_L62_P	DIO	D15	7.44mm	62	B2B_B0_L38_N	DIO	A13	8.38mm
63	B2B_B0_L62_N	DIO	C16	6.95mm	64	B2B_B0_L38_P	DIO	C13	9.87mm
65	B2B_B0_L66_P	DIO	E16	8.07mm	66	B2B_B0_L50_N	DIO	A14	7.66mm
67	B2B_B0_L66_N	DIO	D17	6.96mm	68	B2B_B0_L50_P	DIO	B14	8.87mm
69	GND	GND	-	-	70	GND	GND	-	-
71	B2B_B1_L10_P	DIO	F16	9.56mm	72	B2B_B0_L51_N	DIO	A15	10.22mm
73	B2B_B1_L10_N	DIO	F17	8.85mm	74	B2B_B0_L51_P	DIO	C15	10.67mm
75	B2B_B1_L9_P	DIO	G16	10.59mm	76	B2B_B0_L63_N	DIO	A16	7.95mm
77	B2B_B1_L9_N	DIO	G17	10.23mm	78	B2B_B0_L63_P	DIO	B16	9.12mm
79	GND	GND	-	-	80	GND	GND	-	-
81	B2B_B1_L21_N	DIO	J16	13.22mm	82	B2B_B0_L64_N	DIO	A17	9.55mm
83	B2B_B1_L21_P	DIO	K16	14.41mm	84	B2B_B0_L64_P	DIO	C17	10.25mm
85	B2B_B1_L61_P	DIO	L17	14.89mm	86	B2B_B0_L65_N	DIO	A18	8.51mm
87	B2B_B1_L61_N	DIO	K18	13.59mm	88	B2B_B0_L65_P	DIO	B18	9.29mm
89	GND	GND	-	-	90	GND	GND	-	-
91	VCCAUX	POW	-	-	92	B2B_B1_L20_P	DIO	A20	8.02mm
93	TMS	JTAG	C18	-	94	B2B_B1_L20_N	DIO	A21	7.82mm
95	TDI	JTAG	E18	-	96	B2B_B1_L19_P	DIO	B21	9.63mm
97	TDO	JTAG	A19	-	98	B2B_B1_L19_N	DIO	B22	9.06mm
99	TCK	JTAG	G15	-	100	B2B_B1_L59	SIO	P19	27.19mm

J2 Pin-out

J2 pin	Net	Type	FPGA pin	Net Length	J2 pin	Net	Type	FPGA pin	Net Length

1	VCCIO0	POW	-	-	2	3.3V	POW	-	-
3	VCCIO0	POW	-	-	4	3.3V	POW	-	-
5	VCCIO0	POW	-	-	6	3.3V	POW	-	-
7	VCCIO0	POW	-	-	8	3.3V	POW	-	-
9	VCCIO0	POW	-	-	10	3.3V	POW	-	-
11	B2B_PROGB	CONFIG	-	-	12	3.3V	POW	-	-
13	HSWAPEN	CONFIG	A3	-	14	B2B_B0_L1	SIO	A4	9.4715mm
15	B2B_B3_L60_N	DIO	B1	7.5418mm	16	PFI	TE	-	-
17	B2B_B3_L60_P	DIO	B2	6.7655mm	18	/MR	TE	-	-
19	1.5V	POW	-	-	20	GND	GND	-	-
21	B2B_B3_L9_N	DIO	T3	21.4246 mm	22	B2B_B0_L2_P	DIO	C5	12.0314 mm
23	B2B_B3_L9_P	DIO	T4	21.2943 mm	24	B2B_B0_L2_N	DIO	A5	11.8853 mm
25	B2B_B0_L3_P	DIO	D6	9.0158mm	26	B2B_B0_L4_N	DIO	A6	10.8292 mm
27	B2B_B0_L3_N	DIO	C6	8.4466mm	28	B2B_B0_L4_P	DIO	B6	11.2228 mm

29	GND	GND	-	-	30	GND	GND	-	-
31	B2B_B3_L59_P	DIO	J7	14.0801 mm	32	B2B_B0_L5_N	DIO	A7	11.7078 mm
33	B2B_B3_L59_N	DIO	H8	13.8896 mm	34	B2B_B0_L5_P	DIO	C7	11.9983 mm
35	B2B_B0_L32_P	DIO	D7	9.1276mm	36	B2B_B0_L6_N	DIO	A8	10.6094 mm
37	B2B_B0_L32_N	DIO	D8	9.1646mm	38	B2B_B0_L6_P	DIO	B8	10.9961 mm
39	GND	GND	-	-	40	GND	GND	-	-
41	B2B_B0_L7_N	DIO	C8	9.1167mm	42	B2B_B0_L8_N	DIO	A9	12.2657 mm
43	B2B_B0_L7_P	DIO	D9	9.3073mm	44	B2B_B0_L8_P	DIO	C9	12.5699 mm
45	B2B_B0_L33_N	DIO	C10	8.889mm	46	B2B_B0_L34_N	DIO	A10	11.7216 mm
47	B2B_B0_L33_P	DIO	D10	9.1201mm	48	B2B_B0_L34_P	DIO	B10	11.6163 mm
49	GND	GND	-	-	50	GND	GND	-	-
51	B2B_B0_L36_P	DIO	D11	8.6976mm	52	B2B_B0_L35_N	DIO	A11	12.4283 mm
53	B2B_B0_L36_N	DIO	C12	8.3601mm	54	B2B_B0_L35_P	DIO	C11	12.6535 mm
55	B2B_B0_L49_P	DIO	D14	9.136mm	56	B2B_B0_L37_N	DIO	A12	10.7513 mm

57	B2B_B0_L49_N	DIO	C14	8.7449mm	58	B2B_B0_L37_P	DIO	B12	11.0849 mm
59	GND	GND	-	-	60	GND	GND	-	-
61	B2B_B0_L62_P	DIO	D15	9.687mm	62	B2B_B0_L38_N	DIO	A13	12.5431 mm
63	B2B_B0_L62_N	DIO	C16	9.5212mm	64	B2B_B0_L38_P	DIO	C13	12.8448 mm
65	B2B_B0_L66_P	DIO	E16	10.0885 mm	66	B2B_B0_L50_N	DIO	A14	11.3259 mm
67	B2B_B0_L66_N	DIO	D17	9.9228mm	68	B2B_B0_L50_P	DIO	B14	11.4909 mm
69	GND	GND	-	-	70	GND	GND	-	-
71	B2B_B1_L10_P	DIO	F16	11.3734 mm	72	B2B_B0_L51_N	DIO	A15	12.0938 mm
73	B2B_B1_L10_N	DIO	F17	11.466mm	74	B2B_B0_L51_P	DIO	C15	12.5055 mm
75	B2B_B1_L9_P	DIO	G16	12.5086 mm	76	B2B_B0_L63_N	DIO	A16	11.3551 mm
77	B2B_B1_L9_N	DIO	G17	12.6008 mm	78	B2B_B0_L63_P	DIO	B16	11.772mm
79	GND	GND	-	-	80	GND	GND	-	-
81	B2B_B1_L21_N	DIO	J16	15.7408 mm	82	B2B_B0_L64_N	DIO	A17	13.5157 mm
83	B2B_B1_L21_P	DIO	K16	15.9404 mm	84	B2B_B0_L64_P	DIO	C17	13.4806 mm

85	B2B_B1_L61_P	DIO	L17	17.852mm	86	B2B_B0_L65_N	DIO	A18	12.4997 mm
87	B2B_B1_L61_N	DIO	K18	17.4155 mm	88	B2B_B0_L65_P	DIO	B18	12.3889 mm
89	GND	GND	-	-	90	GND	GND	-	-
91	VCCAUX	POW	-	-	92	B2B_B1_L20_P	DIO	A20	11.0846 mm
93	TMS	JTAG	C18	-	94	B2B_B1_L20_N	DIO	A21	10.7172 mm
95	TDI	JTAG	E18	-	96	B2B_B1_L19_P	DIO	B21	12.0803 mm
97	TDO	JTAG	A19	-	98	B2B_B1_L19_N	DIO	B22	11.8608 mm
99	TCK	JTAG	G15	-	100	B2B_B1_L59	SIO	P19	30.179mm

7.7 Signal Integrity Considerations

Traces of differential signals pairs are routed symmetrically (as symmetric pairs).

Traces of differential signals pairs are NOT routed with equal length, although difference in signal lines length is negligible for actual signal frequencies. For applications where traces length has to be matched or timing differences have to be compensated, Tables abowe list the trace length of I/O signal lines measured from FPGA balls to B2B connector pins.

Traces of differential signals pairs are routed with a differential impedance between the two traces of 100 ohm. Single ended traces are routed with 60 ohm impedance.

An electronic version of these pin-out tables are available for download from the Trenz Electronic support area of the web site.

8 Module revisions and assembly variants

Module revision coded by 4 FPGA BR[3:0] pins, which can be read by FPGA firmware. All these pins should be configured to have internal PULLUP.

Signal FPGA pin	BR3 R19	BR2 P18	BR1 N16	BR0 P17
Revision 01	1	1	1	1
Revision 02	1	1	1	0
Revision 03	1	1	0	1
Revision 04	1	1	0	0

Board revisions pin coding

Main differences between 01 and 02 revisions:

- More powerful regulators for 1.2V and 1.5V rails
- VCCAUX separated from 2.5V power rail
- 128Mbit SPI Flash
- Additional secure 1Kbit EEPROM
- Optional B2B connection to bank 2 differential clock input

Main differences between 02 and 03 revisions:

- Optimized placement and routing for DC/DC converters
- Added thermal vias to mounting holes
- Added Testpoints
- Changed Board revision identification to REV03
- Changed U9 from SIT1602AI-83-33E-25.0000 to SiT8008AI-73-XXS-25.000000E
- Added Track-it™ Traceability Pad
- Change SPI Flash from W25Q128BVEIG to W25Q128FVEIG
- DDR3 changed from IM4G16D3EABG-125I to IM4G16D3FABG-125I for the 4 GBit variants
- U13 (DS2432P+) is no longer populated by default

Main differences between 03 and 04 revisions:

- Optimized placement and routing
- More powerful regulators
- Removed stucked vias
- Added Testpoints
- Changed Board revision identification to REV04
- U12 was fitted for all module assembly variants as default

Module assembly variants coded by 4 zero ohm resistors, connected to FPGA AV[3:0] pins. All these pins should be configured to have internal PULLUP.

Signal FPGA pin	AV3 M18	AV2 M17	AV1 V20	AV0 U19	Speed grade	SDRAM	Temp grade	Status

TE0600-02[V|B]	0	0	0	0	2	2x128MBit	C	obsolete
TE0600-02[V|B]I	0	0	0	1	2	2x128MBit	I	obsolete
TE0600-02[V|B]F	0	0	1	0	3	2x128MBit	C	obsolete
TE0600-02[V|B]IF	0	0	1	1	3	2x128MBit	I	obsolete
TE0600-02[V|B]MF	0	1	0	0	3	2x512MBit	C	obsolete
TE0600-03[V|B]	0	0	0	0	2	2x128MBit	C	full production
TE0600-03[V|B]I	0	0	0	1	2	2x128MBit	I	full production
TE0600-03[V|B]F	0	0	1	0	3	2x128MBit	C	full production
TE0600-03[V|B]IF	0	0	1	1	3	2x128MBit	I	full production
TE0600-03[V|B]MF	0	1	0	0	3	2x512MBit	C	full production
TE0600-04-52 I11	0	0	0	1	2	2x128MBit	I	full production
TE0600-04-72 C11	0	0	0	0	2	2x128MBit	C	full production
TE0600-04-72 C21	0	1	0	0	2	2x512MBit	C	full production
TE0600-04-83 C21	0	1	1	0	3	2x512MBit	C	full production

TE0600-04-83 I11	0	0	1	1	3	2x128MBit	I	full production
TE0600-04-83 I21	0	1	1	1	3	2x512MBit	I	full production

Assembly variants pin coding

9 Related Materials and References

The following documents provide supplementary information useful with this user manual.

9.1 Data Sheets

- Xilinx DS160: Spartan-6 Family Overview
  This overview outlines the features and product selection of the Spartan®-6 family.
  http://www.xilinx.com/support/documentation/data_sheets/ds160.pdf[3]
- Xilinx DS162: Spartan-6 FPGA Data Sheet: DC and Switching Characteristics
  This data sheet contains the DC and switching characteristic specifications for the Spartan®-6 family.
  http://www.xilinx.com/support/documentation/data_sheets/ds162.pdf
- Samtec Razor Beam LSHM series overview.
  http://www.samtec.com/LSHM
- Maxim DS2502-E48 product overview.
  http://www.maxim-ic.com/datasheet/index.mvp/id/3748
- Winbond W25Q128BV product overview.
  http://www.winbond.com/hq/enu/ProductAndSales/ProductLines/FlashMemory/SerialFlash/W25Q128BV.htm
- Maxim DS2432 product page.
  http://www.maximintegrated.com/datasheet/index.mvp/id/2914

9.2 Documentation Archives

- Xilinx Spartan-6 Documentation
  http://www.xilinx.com/support/documentation/spartan-6.htm
- Xilinx Documentation
  http://www.xilinx.com/documentation/
  http://www.xilinx.com/support/documentation/
- Trenz Electronic GigaBee Series Documentation
  http://docs.trenz-electronic.de/Trenz_Electronic/products/TE0600-GigaBee_series/

9.3 User Guides

- Xilinx UG380: Spartan-6 FPGA Configuration User Guide
  This all-encompassing configuration guide includes chapters on configuration interfaces (serial and parallel), multi-bitstream management, bitstream encryption, boundary-scan and JTAG configuration, and reconfiguration techniques.
  http://www.xilinx.com/support/documentation/user_guides/ug380.pdf
- Xilinx UG381: Spartan-6 FPGA SelectIO Resources
  http://www.xilinx.com/support/documentation/user_guides/ug381.pdf

9.4 Design and Development Tools

- Xilinx ISE Design Suite
  http://www.xilinx.com/ISE/
  http://www.xilinx.com/tools/designtools.htm

3 http://www.xilinx.com/support/documentation/data_sheets/ds160.pdfhttp://www.xilinx.com/support/documentation/data_sheets/ds160.pdf

- Xilinx ISE Design Suite (version archive)
  http://www.xilinx.com/download/
  http://www.xilinx.com/support/download/
- Xilinx ISE WebPACK
  http://www.xilinx.com/tools/webpack.htm
  http://www.xilinx.com/webpack/

9.5 Design Resources

- Trenz Electronic GigaBee Design Resources
  https://shop.trenz-electronic.de/de/Download/?path=Trenz_Electronic/TE0600
- Trenz Electronic GigaBee Reference Designs
  https://github.com/Trenz-Electronic/
  https://github.com/Trenz-Electronic/TE-EDK-IP/
  https://github.com/Trenz-Electronic/TE060X-GigaBee-Reference-Designs/

9.6 Tutorials

- Xilinx UG695: ISE In-Depth Tutorial
  Chapter 8: Configuration Using iMPACT
  http://www.xilinx.com/support/documentation/sw_manuals/xilinx13_1/ise_tutorial_ug695.pdf

10 Glossary of Abbreviations and Acronyms

⊗	A WARNING notice denotes a hazard. It calls attention to an operating procedure, practice, or the like that, if not correctly performed or adhered to, could result in damage to the product or loss of important data. Do not proceed beyond a WARNING notice until the indicated conditions are fully understood and met.
⚠	A CAUTION notice denotes a risk. It calls attention to an operating procedure, practice, or the like that, if not correctly performed or adhered to, could result in a fault. (undesired condition that can lead to an error) Do not proceed beyond a CAUTION notice until the indicated conditions are fully understood and met.
API	application programming interface
B2B	board-to-board
DSP	digital signal processing; digital signal processor
EDK	Embedded Development Kit
IOB	input / output blocks; I/O blocks
IP	intellectual property
ISP	In-System Programmability
OTP	one-time programmable
PB	push button
SDK	Software Development Kit
TE	Trenz Electronic
XPS	Xilinx Platform Studio

10.1 Mechanical Dimensions

GigaBee XC6SLX can reach a minimum vertical height of about 8 mm, if B2B connectors are not assembled. The maximum component height on the module board on the top side is about 3.5 mm. The maximum component height on the module board on the bottom side is about 3.0 mm.

The typical minimum and maximum height from the carrier board surface, of a GigaBee XC6SLX when it mounted on a carrier board, is respectively about 5.0 mm and about 13 mm.

GigaBee XC6SLX has 4 mounting holes, one in each corner. The module can be fixed by screwing M3 screws (ISO 262) onto a carrier board through those mounting holes.

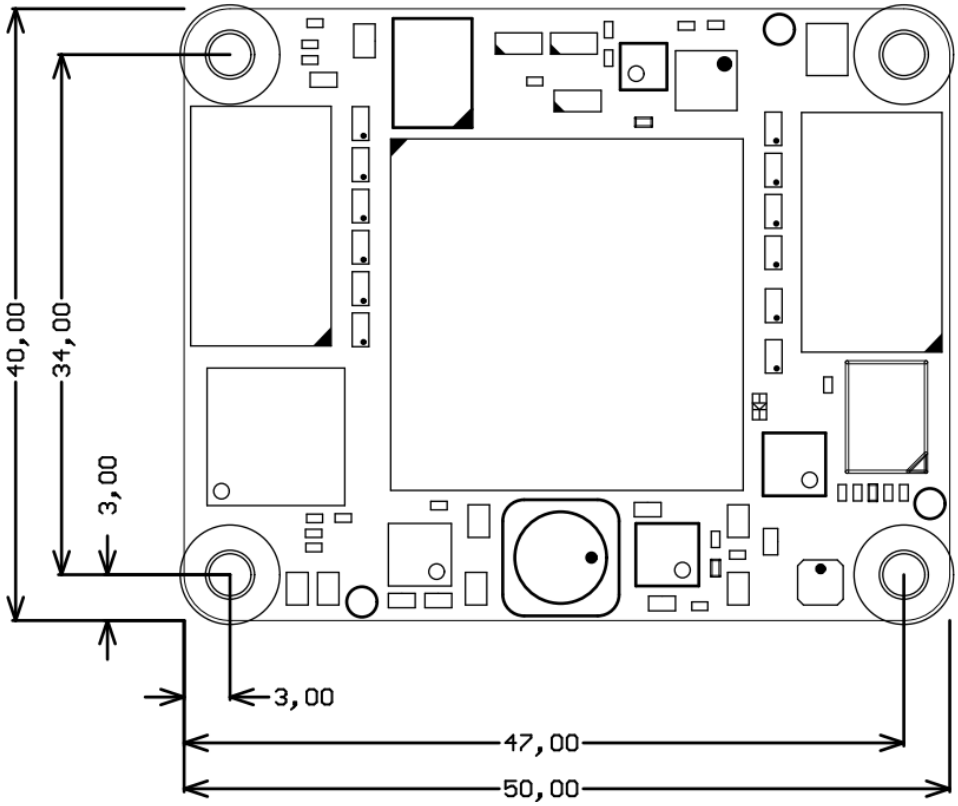

10.2 Operating Temperature Ranges

Commercial grade: 0°C to +70°C.

Industrial grade: -40°C to +85°C.

The module operating temperature range depends also on customer design and cooling solution. Please contact us for options.

10.3 Weight

GigaBee XC6SLX weighs between 17.1 and 17.3 g with standard connectors.

11 Document Change History

Date	Revision	Contributors	Description
2011-10-01	0.01	AIK	Release.
2011-10-05	0.02	AIK	Added B2B pin-out section.
2011-10-06	0.03	AIK	Reformatted pin-out tables. Added eFUSE programming section.
2011-10-06	0.04	AIK	Added board photos. Additions to eFUSE section.
2011-10-06	0.05	AIK	Removed net length information for nets which can't be measured right.
2011-10-06	0.06	AIK	Added power consumption section.
2011-10-08	0.07	AIK	Little fixes after FDR audit.
2011-10-12	0.08	AIK	Fix in eFUSE section.
2011-11-11	0.09	AIK	Added pin numbering description for B2B connectors
2012-01-20	0.10	AIK	Added pin compatibility note and manual reference.
2012-04-12	0.11	AIK	Added FPGA banks VCCIO voltages table.
2012-04-17	1.00	FDR	Updated documentation link. Replaced obsolete ElDesI and RedMine links with current GitHub links. Updated dating convention.

Date	Revision	Contributors	Description
2012-05-18	1.01	AIK	Corrected cross-reference in section 3.2. Corrected LED description.
2012-06-18	1.02	FDR	Removed junction temperature limits under connector current ratings.
2012-07-18	1.03	AIK	Added table with B2B signals summary per FPGA bank
2012-10-30	2.01	AIK	Fork to 01 and 02 board revisions
2012-11-06	2.01	AIK	Fixed bank 1 power options
2012-11-21	2.02	AIK	Updated module diagram
2012-11-30	2.03	AIK	Added Ethernet disable note
2012-12-19	2.04	AIK	Fixed SPI Flash size on block diagram
2013-01-21	2.05	AIK	Added PHY reset note
2013-03-13	2.06	AIK	Connectors current chapter moved to separate document
2013-03-13	2.07	AIK	Changed Bank 1 power supply description and VCCIO0 sources description
2016-01-29	2.08	AIK	Pause advertise correction
2016-11-05	3.00	FDR	Document ported to wiki and adapted to web presentation.
2017-04-03	Unknown macro: 'metadata'	TT	Added REV03 to assembly Variant Table

Date	Revision	Contributors	Description
2024-03-11	4.00	MT	Added REV04 to assembly variant coding table Added REV04 to revision coding table Added main differences between 03 and 04 revisions Updated nets lengths table Added info about additional 3.3V single-ended oscillator (U12) Updated supply diagram Updated block diagram

12 Disclaimer

12.1 Data Privacy

Please also note our data protection declaration at https://www.trenz-electronic.de/en/Data-protection-Privacy

12.2 Document Warranty

The material contained in this document is provided “as is” and is subject to being changed at any time without notice. Trenz Electronic does not warrant the accuracy and completeness of the materials in this document. Further, to the maximum extent permitted by applicable law, Trenz Electronic disclaims all warranties, either express or implied, with regard to this document and any information contained herein, including but not limited to the implied warranties of merchantability, fitness for a particular purpose or non infringement of intellectual property. Trenz Electronic shall not be liable for errors or for incidental or consequential damages in connection with the furnishing, use, or performance of this document or of any information contained herein.

12.3 Limitation of Liability

In no event will Trenz Electronic, its suppliers, or other third parties mentioned in this document be liable for any damages whatsoever (including, without limitation, those resulting from lost profits, lost data or business interruption) arising out of the use, inability to use, or the results of use of this document, any documents linked to this document, or the materials or information contained at any or all such documents. If your use of the materials or information from this document results in the need for servicing, repair or correction of equipment or data, you assume all costs thereof.

12.4 Copyright Notice

No part of this manual may be reproduced in any form or by any means (including electronic storage and retrieval or translation into a foreign language) without prior agreement and written consent from Trenz Electronic.

12.5 Technology Licenses

The hardware / firmware / software described in this document are furnished under a license and may be used / modified / copied only in accordance with the terms of such license.

12.6 Environmental Protection

To confront directly with the responsibility toward the environment, the global community and eventually also oneself. Such a resolution should be integral part not only of everybody's life. Also enterprises shall be conscious of their social responsibility and contribute to the preservation of our common living space. That is why Trenz Electronic invests in the protection of our Environment.

12.7 REACH, RoHS and WEEE

REACH

Trenz Electronic is a manufacturer and a distributor of electronic products. It is therefore a so called downstream user in the sense of REACH[4]. The products we supply to you are solely non-chemical products (goods). Moreover and under normal and reasonably foreseeable circumstances of application, the goods supplied to you shall not release any substance. For that, Trenz Electronic is obliged to neither register nor to provide safety data sheet. According to present knowledge and to best of our knowledge, no SVHC (Substances of Very High Concern) on the Candidate List[5] are contained in our products. Furthermore, we will immediately and unsolicited inform our customers in compliance with REACH - Article 33 if any substance present in our goods (above a concentration of 0,1 % weight by weight) will be classified as SVHC by the European Chemicals Agency (ECHA)[6].

RoHS

Trenz Electronic GmbH herewith declares that all its products are developed, manufactured and distributed RoHS compliant.

WEEE

Information for users within the European Union in accordance with Directive 2002/96/EC of the European Parliament and of the Council of 27 January 2003 on waste electrical and electronic equipment (WEEE).

Users of electrical and electronic equipment in private households are required not to dispose of waste electrical and electronic equipment as unsorted municipal waste and to collect such waste electrical and electronic equipment separately. By the 13 August 2005, Member States shall have ensured that systems are set up allowing final holders and distributors to return waste electrical and electronic equipment at least free of charge. Member States shall ensure the availability and accessibility of the necessary collection facilities. Separate collection is the precondition to ensure specific treatment and recycling of waste electrical and electronic equipment and is necessary to achieve the chosen level of protection of human health and the environment in the European Union. Consumers have to actively contribute to the success of such collection and the return of waste electrical and electronic equipment. Presence of hazardous substances in electrical and electronic equipment results in potential effects on the environment and human health. The symbol consisting of the crossed-out wheeled bin indicates separate collection for waste electrical and electronic equipment.

Trenz Electronic is registered under WEEE-Reg.-Nr. DE97922676.

2019-06-07

4 http://guidance.echa.europa.eu/
5 https://echa.europa.eu/candidate-list-table
6 http://www.echa.europa.eu/