TE0720 Test Board

Revision v.34

Exported on 2019-12-19

Online version of this document:

https://wiki.trenz-electronic.de/pages/viewpage.action?pageId=92995344

1 Table of Contents

Copyright © 2019 Trenz Electronic GmbH

Copyright © 2019 Trenz Electronic GmbH

2 Table of Figures

3 Table of Tables

4 Overview

Zynq PS Design with Linux Example and PHY status LED on Vivado HW-Manager.

Refer to http://trenz.org/te0720-info for the current online version of this manual and other available documentation.

4.1 Key Features

- Vivado 2018.3
- PetaLinux
- SD
- ETH (use EEPROM MAC)
- USB
- I2C
- RTC
- VIO PHY LED
- FSBL for EEPROM MAC and CPLD access
- Special FSBL for QSPI Programming

4.2 Revision History

Date	Vivado	Project Built	Authors	Description
2019-03-04	2018.3	TE0720-test_board-vivado_2018.3-build_01_20190304100745.zip TE0720-test_board_noprebuilt-vivado_2018.3-build_01_20190304100755.zip	John Hartfiel	• update for -1CR version only (256MB DDR3)
2019-02-21	2018.3	TE0720-test_board-vivado_2018.3-build_01_20190221125123.zip TE0720-test_board_noprebuilt-vivado_2018.3-build_01_20190221125133.zip	John Hartfiel	• TE Script update • rework of the FSBLs • some additional Linux features

Date	Vivado	Project Built	Authors	Description
2018-08-23	2018.2	te0720-test_board-vivado_2018.2-build_03_20180823185142.zip te0720-test_board_noprebuilt-vivado_2018.2-build_03_20180823185158.zip	John Hartfiel	• DDR setup bugfix for l1if only
2018-08-13	2018.2	te0720-test_board-vivado_2018.2-build_02_20180810162024.zip te0720-test_board_noprebuilt-vivado_2018.2-build_02_20180810162040.zip	John Hartfiel	• 2018.2 update • Boart Part Files rework
2018-04-26	2017.4	te0720-test_board-vivado_2017.4-build_07_20180426144351.zip te0720-test_board_noprebuilt-vivado_2017.4-build_07_20180426144405.zip	John Hartfiel	• new assembly variant
2018-03-12	2017.4	te0720-test_board_noprebuilt-vivado_2017.4-build_06_20180312152408.zip te0720-test_board-vivado_2017.4-build_06_20180312152419.zip	John Hartfiel	• add assembly variant • script update

Date	Vivado	Project Built	Authors	Description
2018-01-09	2017.4	te0720-test_board_noprebuilt-vivado_2017.4-build_02_20180109121313.zip te0720-test_board-vivado_2017.4-build_02_20180109121300.zip	John Hartfiel	• no design changes • set EEPROM MAC with FSBL+u-boot • FSBL for QSPI Programming
2017-11-27	2017.2	te0720-test_board_noprebuilt-vivado_2017.2-build_05_20171127153028.zip te0720-test_board-vivado_2017.2-build_05_20171127153006.zip	John Hartfiel	• remove duplicated content
2017-11-20	2017.2	te0720-test_board_noprebuilt-vivado_2017.2-build_05_20171122074701.zip te0720-test_board-vivado_2017.2-build_05_20171122074646.zip	John Hartfiel	• initial release

Table 1: Design Revision History

4.3 Release Notes and Know Issues

Issues	Description	Workaround	To be fixed version
Variant with 256MB DDR only(TE0720-03-1CR)	wrong netboot offset	recreate u-boot on petalinux with reduces netboot offset only	solved with 2019-03-04 update

Table 2: Known Issues

4.4 Requirements

4.4.1 Software

Software	Version	Note
Vivado	2018.3	needed
SDK	2018.3	needed
PetaLinux	2018.3	needed

Table 3: Software

4.4.2 Hardware

Basic description of TE Board Part Files is available on TE Board Part Files.[1]

Complete List is available on <design name>/board_files/*_board_files.csv

Design supports following modules:

Module Model	Board Part Short Name	PCB Revision Support	DDR	QSPI Flash	EMMC	Others	Notes
TE0720-03-2IF	2if_1gb	REV03| REV02	1GB	32MB	4GB	NA	NA
TE0720-03-2IFC3	2if_1gb	REV03| REV02	1GB	32MB	4GB	2.5 mm connectors	NA
TE0720-03-2IFC8	2if_1gb	REV03| REV02	1GB	32MB	32GB	NA	NA
TE0720-03-1QF	1qf_1gb	REV03| REV02	1GB	32MB	4GB	NA	NA
TE0720-03-1CF	1cf_1gb	REV03| REV02	1GB	32MB	4GB	NA	NA

1 https://wiki.trenz-electronic.de/display/PD/TE+Board+Part+Files

Module Model	Board Part Short Name	PCB Revision Support	DDR	QSPI Flash	EMMC	Others	Notes
TE0720-03-1CFA	1cf_1gb	REV03| REV02	1GB	32MB	8GB	NA	NA
TE0720-03-2EF	2ef_1gb	REV03| REV02	1GB	32MB	4GB	NA	NA
TE0720-03-1CR	1cr_256mb	REV03| REV02	256 MB	32MB	NA	NA	NA
TE0720-03-L1IF	l1if_512mb	REV03| REV02	512 MB	32MB	4GB	NA	LP DDR3
TE0720-03-14S-1C	14s_1gb	REV03| REV02	1GB	32MB	4GB	NA	NA
TE0720-03-1QFA	1qf_1gb	REV03| REV02	1GB	32MB	4GB	NA	Micron Flash
TE0720-03-2IFA	2if_1gb	REV03| REV02	1GB	32MB	4GB	NA	Micron Flash
TE0720-03-1QFL	1qf_1gb	REV03| REV02	1GB	32MB	4GB	2.5 mm connectors	NA

Table 4: Hardware Modules
Design supports following carriers:

Carrier Model	Notes
TE0701	• See restrictions on usage with 7 Series Carriers: 4 x 5 SoM Carriers[2]
TE0703	• See restrictions on usage with 7 Series Carriers: 4 x 5 SoM Carriers[3] • Used as reference carrier.
TE0705	• See restrictions on usage with 7 Series Carriers: 4 x 5 SoM Carriers[4]

2 https://wiki.trenz-electronic.de/display/PD/4+x+5+SoM+Carriers
3 https://wiki.trenz-electronic.de/display/PD/4+x+5+SoM+Carriers
4 https://wiki.trenz-electronic.de/display/PD/4+x+5+SoM+Carriers

Copyright © 2019 Trenz Electronic GmbH

Carrier Model	Notes
TE0706	• See restrictions on usage with 7 Series Carriers: 4 x 5 SoM Carriers[5]
TEBA0841	• See restrictions on usage with 7 Series Carriers: 4 x 5 SoM Carriers[6] • No SD Slot available, pins goes to Pin Header • For TEBA0841 REV01, please contact TE support

Table 5: Hardware Carrier

Additional HW Requirements:

Additional Hardware	Notes
USB Cable for JTAG/UART	Check Carrier Board and Programmer for correct type
XMOD Programmer	Carrier Board dependent, only if carrier has no own FTDI

Table 6: Additional Hardware

4.5 Content

For general structure and of the reference design, see Project Delivery - Xilinx devices[7]

4.5.1 Design Sources

Type	Location	Notes
Vivado	<design name>/ block_design <design name>/ constraints <design name>/ip_lib	Vivado Project will be generated by TE Scripts
SDK/ HSI	<design name>/sw_lib	Additional Software Template for SDK/HSI and apps_list.csv with settings for HSI
PetaLinux	<design name>/os/ petalinux	PetaLinux template with current configuration

Table 7: Design sources

5 https://wiki.trenz-electronic.de/display/PD/4+x+5+SoM+Carriers
6 https://wiki.trenz-electronic.de/display/PD/4+x+5+SoM+Carriers
7 https://wiki.trenz-electronic.de/display/PD/Project+Delivery+-+Xilinx+devices

Copyright © 2019 Trenz Electronic GmbH

4.5.2 Additional Sources

Type	Location	Notes
init.sh	<design name>/sd/	Additional Initialization Script for Linux

Table 8: Additional design sources

4.5.3 Prebuilt

File	File-Extension	Description
BIF-File	*.bif	File with description to generate Bin-File
BIT-File	*.bit	FPGA (PL Part) Configuration File
DebugProbes-File	*.ltx	Definition File for Vivado/Vivado Labtools Debugging Interface
Debian SD-Image	*.img	Debian Image for SD-Card
Diverse Reports	---	Report files in different formats
Hardware-Platform-Specification-Files	*.hdf	Exported Vivado Hardware Specification for SDK/ HSI and PetaLinux
LabTools Project-File	*.lpr	Vivado Labtools Project File
OS-Image	*.ub	Image with Linux Kernel (On Petalinux optional with Devicetree and RAM-Disk)
Software-Application-File	*.elf	Software Application for Zynq or MicroBlaze Processor Systems

Table 9: Prebuilt files (only on ZIP with prebult content)

4.5.4 Download

Reference Design is only usable with the specified Vivado/SDK/PetaLinux/SDx version. Do never use different Versions of Xilinx Software for the same Project.

Reference Design is available on:

- TE0720 "Test Board" Reference Design[8]

8 https://shop.trenz-electronic.de/Download/?path=Trenz_Electronic/Modules_and_Module_Carriers/4x5/TE0720/Reference_Design/2018.3/test_board

5 Design Flow

> ⚠ Reference Design is available with and without prebuilt files. It's recommended to use TE prebuilt files for first lunch.

Trenz Electronic provides a tcl based built environment based on Xilinx Design Flow.

See also:

- Xilinx Development Tools[9]
- Vivado Projects - TE Reference Design[10]
- Project Delivery.[11]

The Trenz Electronic FPGA Reference Designs are TCL-script based project. Command files for execution will be generated with "_create_win_setup.cmd" on Windows OS and "_create_linux_setup.sh" on Linux OS.

TE Scripts are only needed to generate the vivado project, all other additional steps are optional and can also executed by Xilinx Vivado/SDK GUI. For currently Scripts limitations on Win and Linux OS see: Project Delivery Currently limitations of functionality[12]

1. _create_win_setup.cmd/_create_linux_setup.sh and follow instructions on shell:

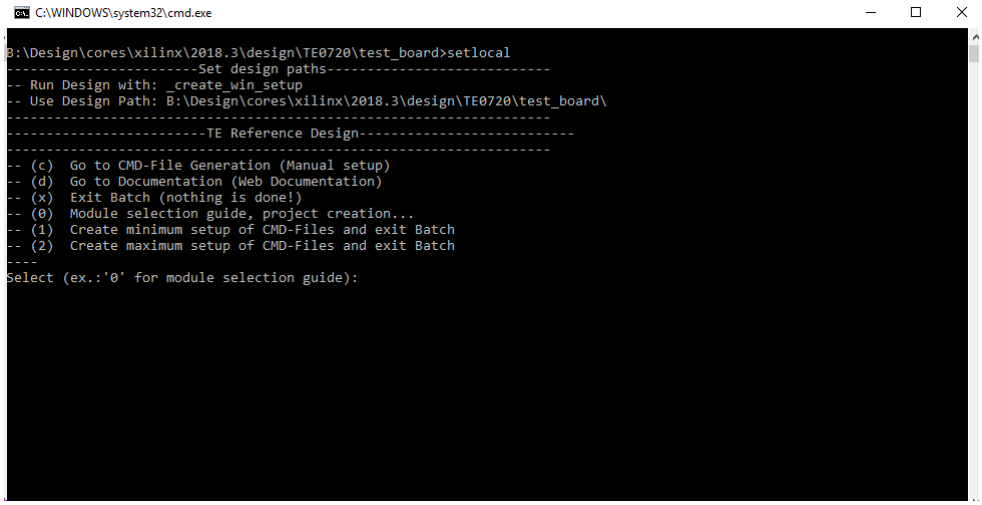

2. Press 0 and enter to start "Module Selection Guide"
3. (optional Win OS) Generate Virtual Drive or use short directory for the reference design (for example x: \<design name>)
4. Create Project (follow instruction of the product selection guide), settings file will be configured automatically during this process
   a. (optional for manual changes) Select correct device and Xilinx install path on "design_basic_settings.cmd" and create Vivado project with "vivado_create_project_guimode.cmd"
      Note: Select correct one, see TE Board Part Files[13]
5. Create HDF and export to prebuilt folder
   a. Run on Vivado TCL: TE::hw_build_design -export_prebuilt
      Note: Script generate design and export files into \prebuilt\hardware\<short dir>. Use GUI is the same, except file export to prebuilt folder

9 https://wiki.trenz-electronic.de/display/PD/Xilinx+Development+Tools#XilinxDevelopmentTools-XilinxSoftware-BasicUserGuides
10 https://wiki.trenz-electronic.de/display/PD/Vivado+Projects+-+TE+Reference+Design
11 https://wiki.trenz-electronic.de/display/PD/Project+Delivery+-+Xilinx+devices
12 https://wiki.trenz-electronic.de/display/PD/Project+Delivery+-+Xilinx+devices#ProjectDelivery-Xilinxdevices-Currentlylimitationsoffunctionality
13 https://wiki.trenz-electronic.de/display/PD/TE+Board+Part+Files

6. Create Linux (uboot.elf and image.ub) with exported HDF
    a. HDF is exported to "prebuilt\hardware\<short name>"
       Note: HW Export from Vivado GUI create another path as default workspace.
       Create Linux images on VM, see PetaLinux KICKstart[14]
        i. Use TE Template from /os/petalinux
7. Add Linux files (uboot.elf and image.ub) to prebuilt folder
    a. "prebuilt\os\petalinux\<ddr size>" or "prebuilt\os\petalinux\<short name>"
       Notes: Scripts select "prebuilt\os\petalinux\<short name>", if exist, otherwise "prebuilt\os\petalinux\<DDR size>" of the selected device
8. Generate Programming Files with HSI/SDK
    a. Run on Vivado TCL: TE::sw_run_hsi
       Note: Scripts generate applications and bootable files, which are defined in "sw_lib\apps_list.csv"
    b. (alternative) Start SDK with Vivado GUI or start with TE Scripts on Vivado TCL: TE::sw_run_sdk
       Note: See SDK Projects[15]

14 https://wiki.trenz-electronic.de/display/PD/PetaLinux+KICKstart
15 https://wiki.trenz-electronic.de/display/PD/SDK+Projects

Copyright © 2019 Trenz Electronic GmbH

6 Launch

6.1 Programming

⚠ Check Module and Carrier TRMs for proper HW configuration before you try any design.

Xilinx documentation for programming and debugging: Vivado/SDK/SDSoC-Xilinx Software Programming and Debugging[16]

6.1.1 QSPI

Optional for Boot.bin on QSPI Flash and image.ub on SD.

1. Connect JTAG and power on carrier with module
2. Open Vivado Project with "vivado_open_existing_project_guimode.cmd" or if not created, create with "vivado_create_project_guimode.cmd"
3. Type on Vivado TCL Console: TE::pr_program_flash_binfile -swapp u-boot
   Note: To program with SDK/Vivado GUI, use special FSBL (zynq_fsbl_flash) on setup
   optional "TE::pr_program_flash_binfile -swapp hello_te0720" possible
4. Copy image.ub on SD-Card
5. Insert SD-Card

6.1.2 SD

1. Copy image.ub and Boot.bin on SD-Card.
   - For correct prebuilt file location, see <design_name>/prebuilt/readme_file_location.txt
2. Set Boot Mode to SD-Boot.
   - Depends on Carrier, see carrier TRM.
3. Insert SD-Card in SD-Slot.

6.1.3 JTAG

Not used on this Example.

6.2 Usage

1. Prepare HW like described on section Programming(see page 16)
2. Connect UART USB (most cases same as JTAG)
3. Select SD Card as Boot Mode (or QSPI - depending on step 1)
   Note: See TRM of the Carrier, which is used.
4. Power On PCB
   Note: 1. Zynq Boot ROM loads FSBL from SD into OCM, 2. FSBL loads U-boot from SD into DDR, 3. U-boot load Linux from SD into DDR

16 https://wiki.trenz-electronic.de/display/PD/Xilinx+Development+Tools#XilinxDevelopmentTools-XilinxSoftwareProgrammingandDebugging

6.2.1 Linux

1. Open Serial Console (e.g. putty)
    a. Speed: 115200
    b. COM Port: Win OS, see device manager, Linux OS see dmesg |grep tty (UART is *USB1)
2. Linux Console:
   Note: Wait until Linux boot finished For Linux Login use:
    a. User Name: root
    b. Password: root
3. You can use Linux shell now.
    a. I2C 0 Bus type: i2cdetect -y -r 0
    b. I2C 1 Bus type: i2cdetect -y -r 1
    c. RTC check: dmesg | grep rtc
    d. ETH0 works with udhcpc
    e. USB: insert USB device
4. Option Features
    a. Webserver to get access to Zynq
        i. insert IP on web browser to start web interface
    b. init.sh scripts
        i. add init.sh script on SD, content will be load automatically on startup (template included in ./misc/SD)

6.2.2 Vivado HW Manager

Open Vivado HW-Manager and add VIO signal to dashboard (*.ltx located on prebuilt folder

- Monitoring: PHY LED

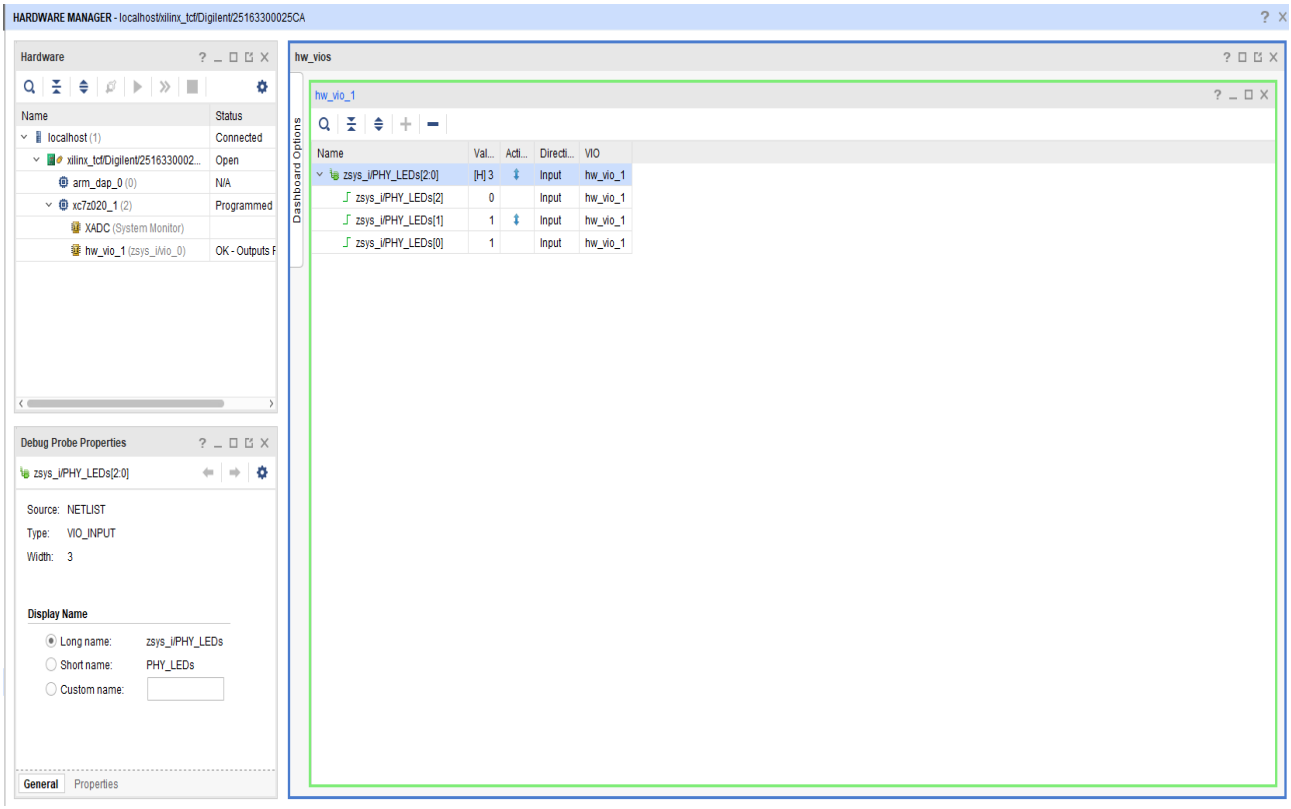

Figure 1: Vivado Hardware Manager

7 System Design - Vivado

7.1 Block Design

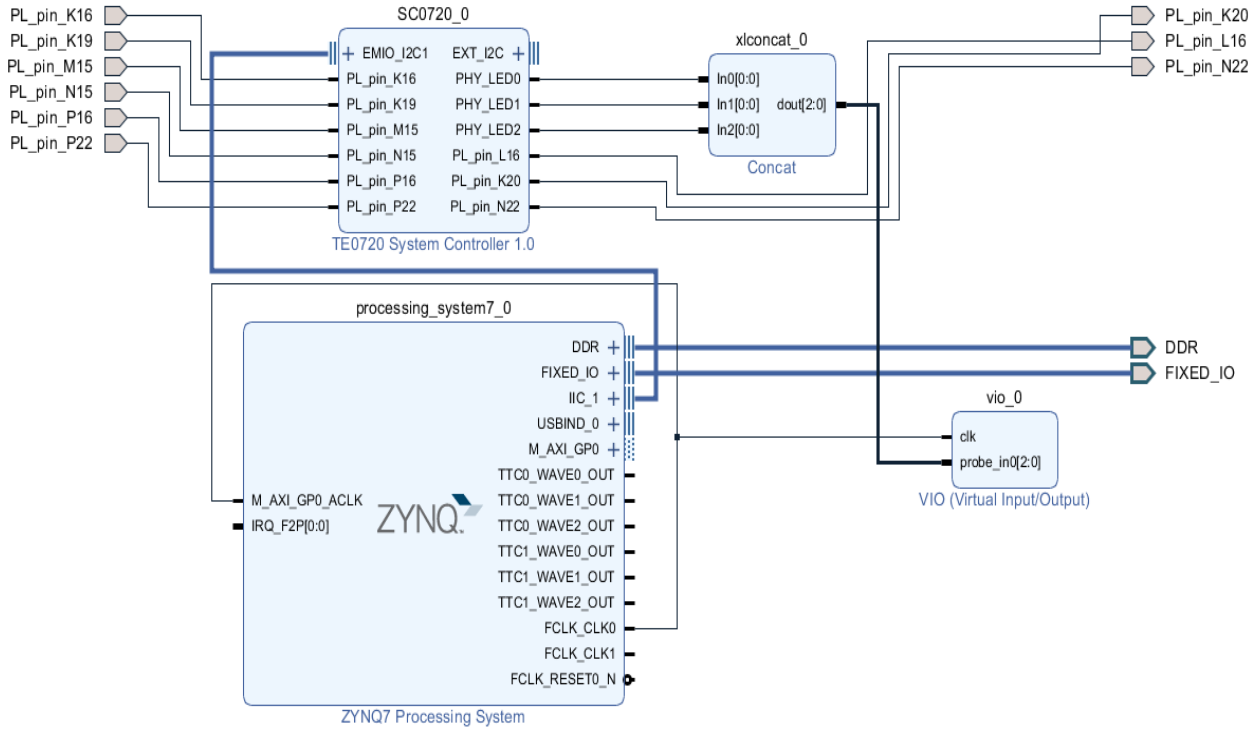

Figure 2: Block Design

7.1.1 PS Interfaces

Type	Note
DDR	---
QSPI	MIO
ETH0	MIO
USB0	MIO
SD0	MIO
SD1	MIO

Type	Note
UART0	MIO
UART1	MIO
I2C0	MIO
I2C1	EMIO
GPIO	MIO
TTC0..1	EMIO
WDT	EMIO

7.2 Constrains

7.2.1 Basic module constrains

_i_bitgen_common.xdc

```
#
# Common BITGEN related settings for TE0720 SoM
#
set_property BITSTREAM.GENERAL.COMPRESS TRUE [current_design]
set_property CONFIG_VOLTAGE 3.3 [current_design]
set_property CFGBVS VCCO [current_design
```

_i_common.xdc

```
#
set_property BITSTREAM.CONFIG.UNUSEDPIN PULLUP [current_design]
```

7.2.2 Design specific constrain

_i_TE0720-SC.xdc

```
#
# Constraints for System controller support logic
#
set_property PACKAGE_PIN K16 [get_ports PL_pin_K16]
set_property PACKAGE_PIN K19 [get_ports PL_pin_K19]
set_property PACKAGE_PIN K20 [get_ports PL_pin_K20]
set_property PACKAGE_PIN L16 [get_ports PL_pin_L16]
set_property PACKAGE_PIN M15 [get_ports PL_pin_M15]
set_property PACKAGE_PIN N15 [get_ports PL_pin_N15]
set_property PACKAGE_PIN N22 [get_ports PL_pin_N22]
set_property PACKAGE_PIN P16 [get_ports PL_pin_P16]
set_property PACKAGE_PIN P22 [get_ports PL_pin_P22]

#
# If Bank 34 is not 3.3V Powered need change the IOSTANDARD
#
set_property IOSTANDARD LVCMOS33 [get_ports PL_pin_P22]
set_property IOSTANDARD LVCMOS33 [get_ports PL_pin_P16]
set_property IOSTANDARD LVCMOS33 [get_ports PL_pin_N22]
set_property IOSTANDARD LVCMOS33 [get_ports PL_pin_N15]
set_property IOSTANDARD LVCMOS33 [get_ports PL_pin_M15]
set_property IOSTANDARD LVCMOS33 [get_ports PL_pin_L16]
set_property IOSTANDARD LVCMOS33 [get_ports PL_pin_K20]
set_property IOSTANDARD LVCMOS33 [get_ports PL_pin_K19]
set_property IOSTANDARD LVCMOS33 [get_ports PL_pin_K16]
```

Copyright © 2019 Trenz Electronic GmbH

8 Software Design - SDK/HSI

For SDK project creation, follow instructions from:

SDK Projects[17]

8.1 Application

Template location: ./sw_lib/sw_apps/

8.1.1 zynq_fsbl

TE modified 2018.3 FSBL

General:

- Modified Files:main.c, fsbl_hooks.h/.c (search for 'TE Mod' on source code)
- Add Files: te_fsbl_hooks.h/.c(for hooks and board)\n\
- General Changes:
    - Display FSBL Banner and Device ID

Module Specific:

- Add Files: all TE Files start with te_*
    - READ MAC from EEPROM and make Address accessible by UBOOT (need copy defines on uboot platform-top.h)
    - CPLD access
    - Read CPLD Firmware and SoC Type
    - Configure Marvell PHY
    - USB PHY Reset
    - Configure LED usage

8.1.2 zynq_fsbl_flash

TE modified 2018.3 FSBL

General:

- Modified Files: main.c
- General Changes:
    - Display FSBL Banner
    - Set FSBL Boot Mode to JTAG
    - Disable Memory initialisation

8.1.3 hello_te0720

Hello World App in Endless loop.

17 https://wiki.trenz-electronic.de/display/PD/SDK+Projects

8.1.4 u-boot

U-Boot.elf is generated with PetaLinux. SDK/HSI is used to generate Boot.bin.

9 Software Design - PetaLinux

For PetaLinux installation and project creation, follow instructions from:

- PetaLinux KICKstart[18]

9.1 Config

Start with **petalinux-config** or **petalinux-config --get-hw-description**

Changes:

- CONFIG_SUBSYSTEM_SERIAL_PS7_UART_0_SELECT=y
- CONFIG_SUBSYSTEM_SERIAL_IP_NAME="ps7_uart_0"
- CONFIG_SUBSYSTEM_NETBOOT_OFFSET=0x8000000 ! Must be done manually for 256MB DDR only → not done on with HDF import from the template!

9.2 U-Boot

Start with **petalinux-config -c u-boot**

Changes:

- CONFIG_ENV_IS_NOWHERE=y
- # CONFIG_ENV_IS_IN_SPI_FLASH is not set

Change platform-top.h:

18 https://wiki.trenz-electronic.de/display/PD/PetaLinux+KICKstart

```
#include <configs/platform-auto.h>
#define CONFIG_SYS_BOOTM_LEN 0xF000000
#define DFU_ALT_INFO_RAM \
                "dfu_ram_info=" \
        "setenv dfu_alt_info " \
        "image.ub ram $netstart 0x1e00000\0" \
        "dfu_ram=run dfu_ram_info && dfu 0 ram 0\0" \
        "thor_ram=run dfu_ram_info && thordown 0 ram 0\0"

#define DFU_ALT_INFO_MMC \
        "dfu_mmc_info=" \
        "set dfu_alt_info " \
        "${kernel_image} fat 0 1\\\\;" \
        "dfu_mmc=run dfu_mmc_info && dfu 0 mmc 0\0" \
        "thor_mmc=run dfu_mmc_info && thordown 0 mmc 0\0"


/*Required for uartless designs */
#ifndef CONFIG_BAUDRATE
#define CONFIG_BAUDRATE 115200
#ifdef CONFIG_DEBUG_UART
#undef CONFIG_DEBUG_UART
#endif
#endif

/*Define CONFIG_ZYNQ_EEPROM here and its necessaries in u-boot menuconfig if you had
EEPROM memory. */
#ifdef CONFIG_ZYNQ_EEPROM
#define CONFIG_SYS_I2C_EEPROM_ADDR_LEN         1
#define CONFIG_SYS_I2C_EEPROM_ADDR             0x54
#define CONFIG_SYS_EEPROM_PAGE_WRITE_BITS      4
#define CONFIG_SYS_EEPROM_PAGE_WRITE_DELAY_MS  5
#define CONFIG_SYS_EEPROM_SIZE                 1024 /* Bytes */
#define CONFIG_SYS_I2C_MUX_ADDR                0x74
#define CONFIG_SYS_I2C_MUX_EEPROM_SEL          0x4
#endif

#define CONFIG_PREBOOT    "echo U-BOOT for petalinux;echo importing env from FSBL
shared area at 0xFFFFFC00; if itest *0xFFFFFC00 == 0xCAFEBABE; then echo Found valid
magic; env import -t 0xFFFFFC04; fi;setenv preboot; echo; dhcp"
```

9.3 Device Tree

```
/include/ "system-conf.dtsi"
/ {
};


/* default */

/* QSPI PHY */
&qspi {
    #address-cells = <1>;
    #size-cells = <0>;
    status = "okay";
    flash0: flash@0 {
        compatible = "jedec,spi-nor";
        reg = <0x0>;
        #address-cells = <1>;
        #size-cells = <1>;
    };
};


/* ETH PHY */
&gem0 {
    phy-handle = <&phy0>;
    mdio {
        #address-cells = <1>;
        #size-cells = <0>;
        phy0: phy@0 {
            compatible = "marvell,88e1510";
            device_type = "ethernet-phy";
            reg = <0>;
        };
    };
};

/* USB PHY */

/{
    usb_phy0: usb_phy@0 {
        compatible = "ulpi-phy";
        //compatible = "usb-nop-xceiv";
        #phy-cells = <0>;
        reg = <0xe0002000 0x1000>;
        view-port = <0x0170>;
        drv-vbus;
    };
};

&usb0 {
    dr_mode = "host";
    //dr_mode = "peripheral";
```

```
    usb-phy = <&usb_phy0>;
};

/* I2C need I2C1 connected to te0720 system controller ip */
&i2c1 {

    iexp@20 {       // GPIO in CPLD
        #gpio-cells = <2>;
        compatible = "ti,pcf8574";
        reg = <0x20>;
        gpio-controller;
    };

    iexp@21 {       // GPIO in CPLD
        #gpio-cells = <2>;
        compatible = "ti,pcf8574";
        reg = <0x21>;
        gpio-controller;
    };

    rtc@6F {        // Real Time Clock
        compatible = "isl12022";
        reg = <0x6F>;
    };
};
```

9.4 Kernel

Start with **petalinux-config -c kernel**

Changes:

- CONFIG_RTC_DRV_ISL12022=y

9.5 Rootfs

Start with **petalinux-config -c rootfs**

Changes:

- CONFIG_i2c-tools=y
- CONFIG_busybox-httpd=y (for web server app)

9.6 Applications

9.6.1 startup

Script App to load init.sh from SD Card if available.

See: \os\petalinux\project-spec\meta-user\recipes-apps\startup\files

9.6.2 webfwu

Webserver application accemble for Zynq access. Need busybox-httpd

10 Additional Software

No additional software is needed.

11 Appx. A: Change History and Legal Notices

11.1 Document Change History

To get content of older revision got to "Change History" of this page and select older document revision number.

Date	Document Revision	Authors	Description
2019-12-19	v.36[19]	John Hartfiel[20]	• bugfix document link
2019-10-28	v.33	John Hartfiel	• removed remove instructions that are no longer used
2019-05-07	v.31	John Hartfiel	• Some FSBL notes • wrong link
2019-03-06	v.28	John Hartfiel	• Fixed prebuilt issue for TE0720-03-1CR
2019-03-01	v.27	John Hartfiel	• Known issue for TE0720-03-1CR linux design
2019-02-21	v.26	John Hartfiel	• 2018.3 release finished (include design reworks)
2018-08-30	v.25	John Hartfiel	• update documentation PS configuration
2018-08-23	v.24	John Hartfiel	• update l1if boart parts
2018-08-13	v.23	John Hartfiel	• 2018.4 release
2018-04-26	v.22	John Hartfiel	• add assembly variant
2018-02-20	v.20	John Hartfiel	• small documentation update

19 https://wiki.trenz-electronic.de/pages/viewpage.action?pageId=46039904
20 https://wiki.trenz-electronic.de/display/~j.hartfiel

Copyright © 2019 Trenz Electronic GmbH

Date	Document Revision	Authors	Description
2018-01-09	v.16	John Hartfiel	• Release 2017.4 • Documentation update
2017-11-27	v.14	John Hartfiel	• Typo correction • Design Files update
2017-11-22	v.12	John Hartfiel	• Update HW list
2017-11-22	v.11	John Hartfiel	• Release 2017.2
2017-11-20	v.1	John Hartfiel[21]	• Initial release
--	All	Antonio Luppi[22] , John Hartfiel[23]	--

Table 10: Document change history.

11.2 Legal Notices

11.3 Data Privacy

Please also note our data protection declaration at https://www.trenz-electronic.de/en/Data-protection-Privacy

11.4 Document Warranty

The material contained in this document is provided “as is” and is subject to being changed at any time without notice. Trenz Electronic does not warrant the accuracy and completeness of the materials in this document. Further, to the maximum extent permitted by applicable law, Trenz Electronic disclaims all warranties, either express or implied, with regard to this document and any information contained herein, including but not limited to the implied warranties of merchantability, fitness for a particular purpose or non infringement of intellectual property. Trenz Electronic shall not be liable for errors or for incidental or consequential damages in connection with the furnishing, use, or performance of this document or of any information contained herein.

21 https://wiki.trenz-electronic.de/display/~j.hartfiel
22 https://wiki.trenz-electronic.de/display/~a.luppi
23 https://wiki.trenz-electronic.de/display/~j.hartfiel

Copyright © 2019 Trenz Electronic GmbH

11.5 Limitation of Liability

In no event will Trenz Electronic, its suppliers, or other third parties mentioned in this document be liable for any damages whatsoever (including, without limitation, those resulting from lost profits, lost data or business interruption) arising out of the use, inability to use, or the results of use of this document, any documents linked to this document, or the materials or information contained at any or all such documents. If your use of the materials or information from this document results in the need for servicing, repair or correction of equipment or data, you assume all costs thereof.

11.6 Copyright Notice

No part of this manual may be reproduced in any form or by any means (including electronic storage and retrieval or translation into a foreign language) without prior agreement and written consent from Trenz Electronic.

11.7 Technology Licenses

The hardware / firmware / software described in this document are furnished under a license and may be used / modified / copied only in accordance with the terms of such license.

11.8 Environmental Protection

To confront directly with the responsibility toward the environment, the global community and eventually also oneself. Such a resolution should be integral part not only of everybody's life. Also enterprises shall be conscious of their social responsibility and contribute to the preservation of our common living space. That is why Trenz Electronic invests in the protection of our Environment.

11.9 REACH, RoHS and WEEE

REACH

Trenz Electronic is a manufacturer and a distributor of electronic products. It is therefore a so called downstream user in the sense of REACH[24]. The products we supply to you are solely non-chemical products (goods). Moreover and under normal and reasonably foreseeable circumstances of application, the goods supplied to you shall not release any substance. For that, Trenz Electronic is obliged to neither register nor to provide safety data sheet. According to present knowledge and to best of our knowledge, no SVHC (Substances of Very High Concern) on the Candidate List[25] are contained in our products. Furthermore, we will immediately and unsolicited inform our customers in compliance with REACH - Article 33 if any substance present in our goods (above a concentration of 0,1 % weight by weight) will be classified as SVHC by the European Chemicals Agency (ECHA)[26].

RoHS

Trenz Electronic GmbH herewith declares that all its products are developed, manufactured and distributed RoHS compliant.

WEEE

24 http://guidance.echa.europa.eu/
25 https://echa.europa.eu/candidate-list-table
26 http://www.echa.europa.eu/

Information for users within the European Union in accordance with Directive 2002/96/EC of the European Parliament and of the Council of 27 January 2003 on waste electrical and electronic equipment (WEEE).

Users of electrical and electronic equipment in private households are required not to dispose of waste electrical and electronic equipment as unsorted municipal waste and to collect such waste electrical and electronic equipment separately. By the 13 August 2005, Member States shall have ensured that systems are set up allowing final holders and distributors to return waste electrical and electronic equipment at least free of charge. Member States shall ensure the availability and accessibility of the necessary collection facilities. Separate collection is the precondition to ensure specific treatment and recycling of waste electrical and electronic equipment and is necessary to achieve the chosen level of protection of human health and the environment in the European Union. Consumers have to actively contribute to the success of such collection and the return of waste electrical and electronic equipment. Presence of hazardous substances in electrical and electronic equipment results in potential effects on the environment and human health. The symbol consisting of the crossed-out wheeled bin indicates separate collection for waste electrical and electronic equipment.

Trenz Electronic is registered under WEEE-Reg.-Nr. DE97922676.

2019-06-07