Variant name: TE0821-01-3BE21MAZ

Top View

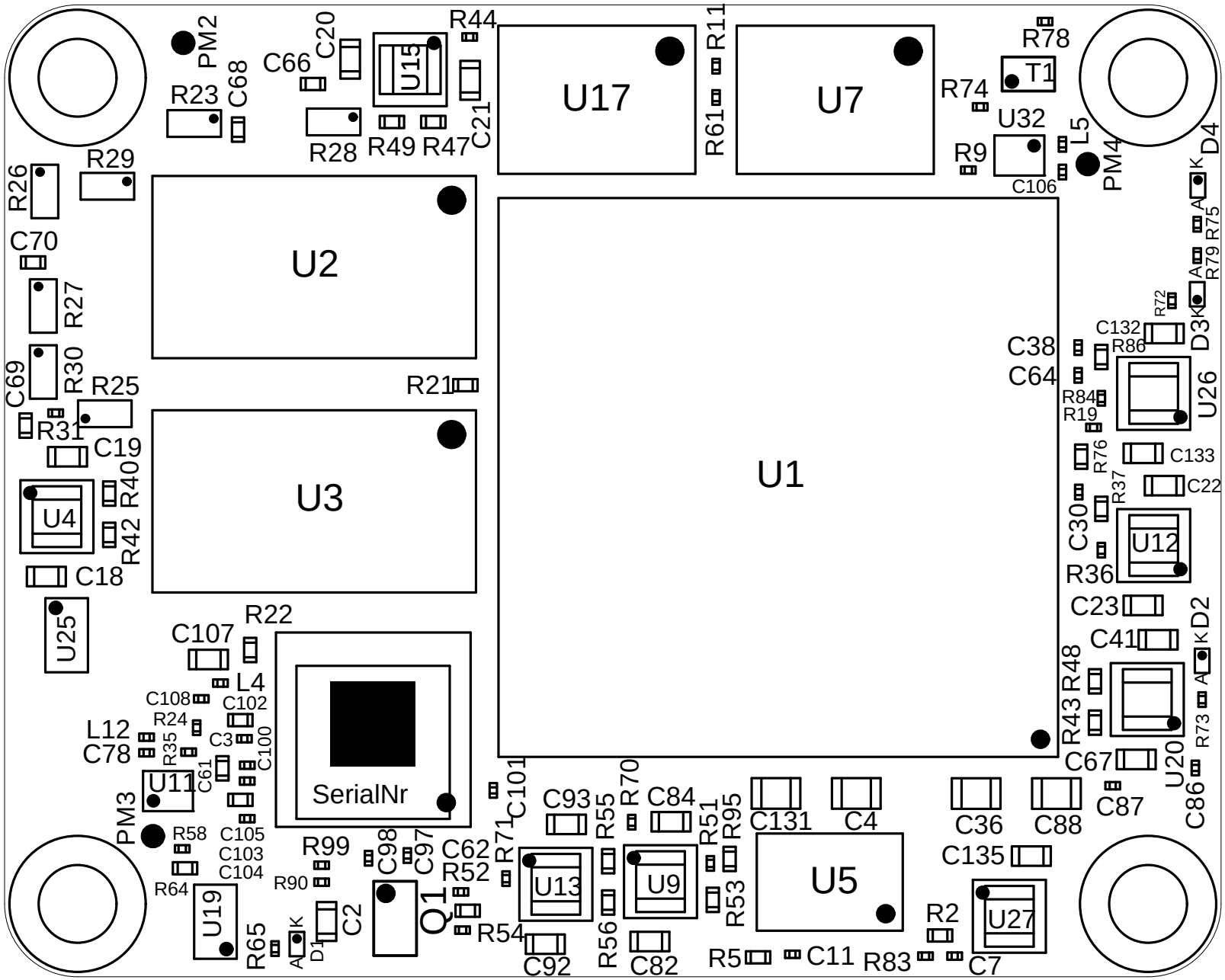

Variant name: TE0821-01-3BE21MAZ
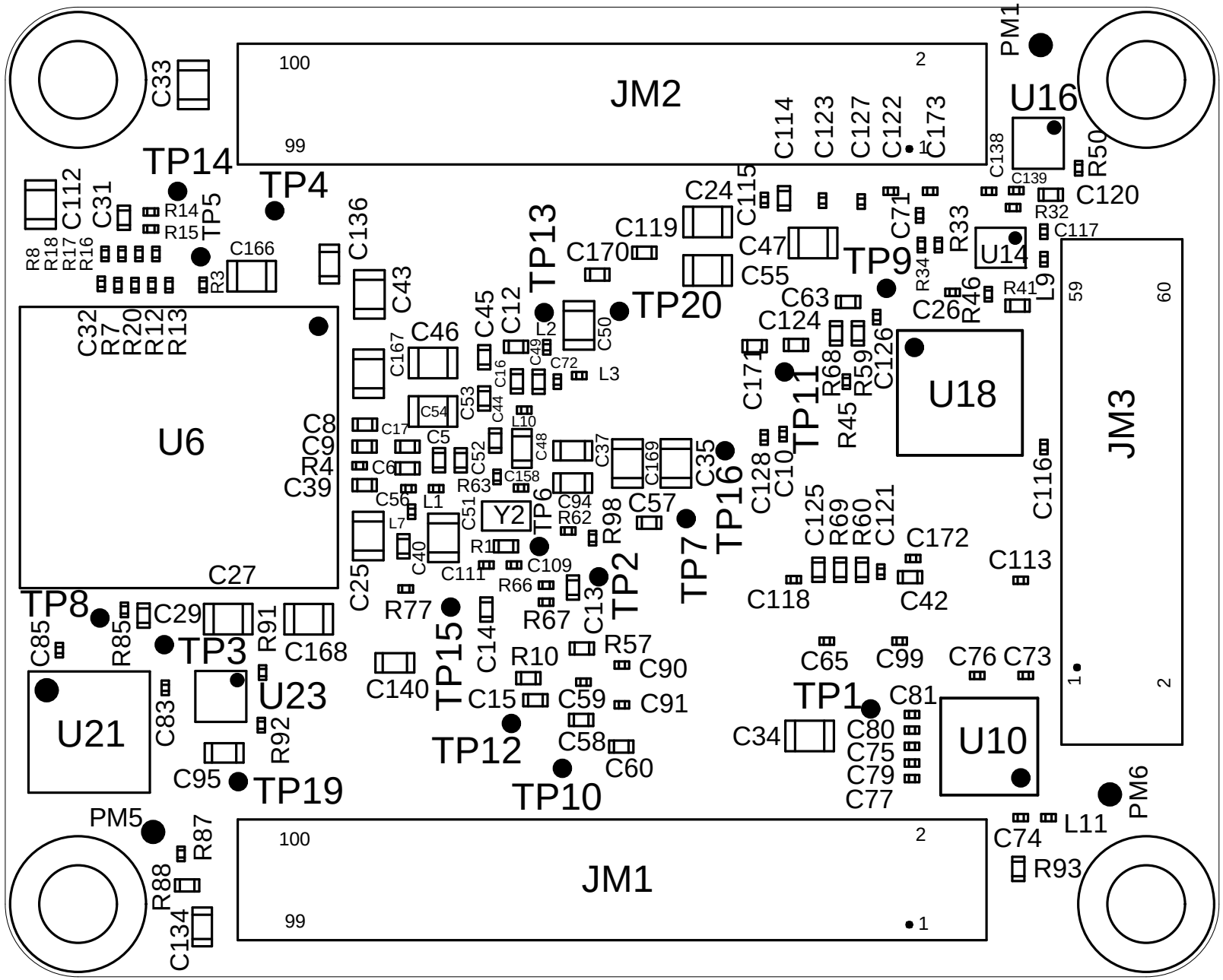
Bottom View