Variant name: TE0821-01-3BI21MD

Top View

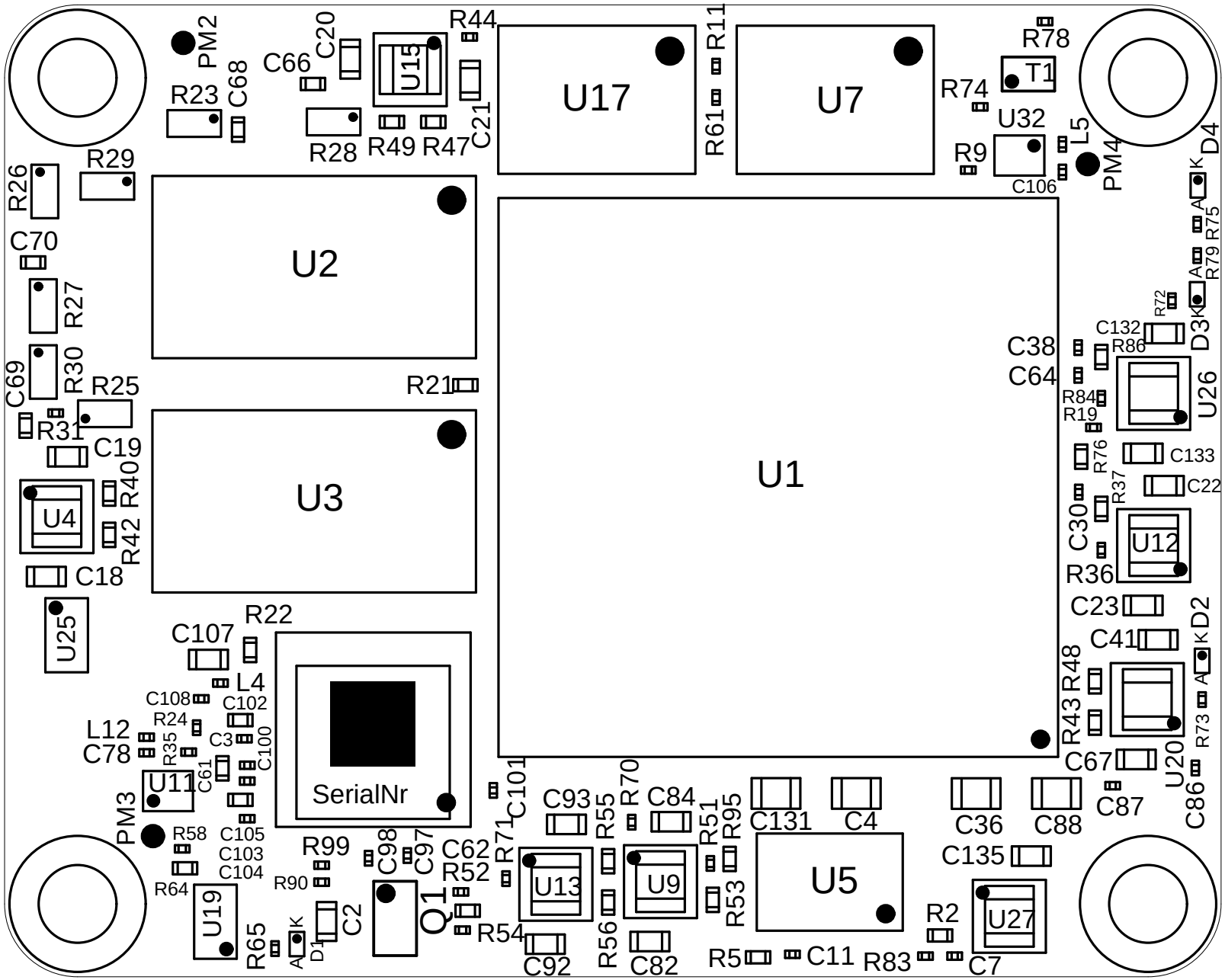

Variant name: TE0821-01-3BI21MD
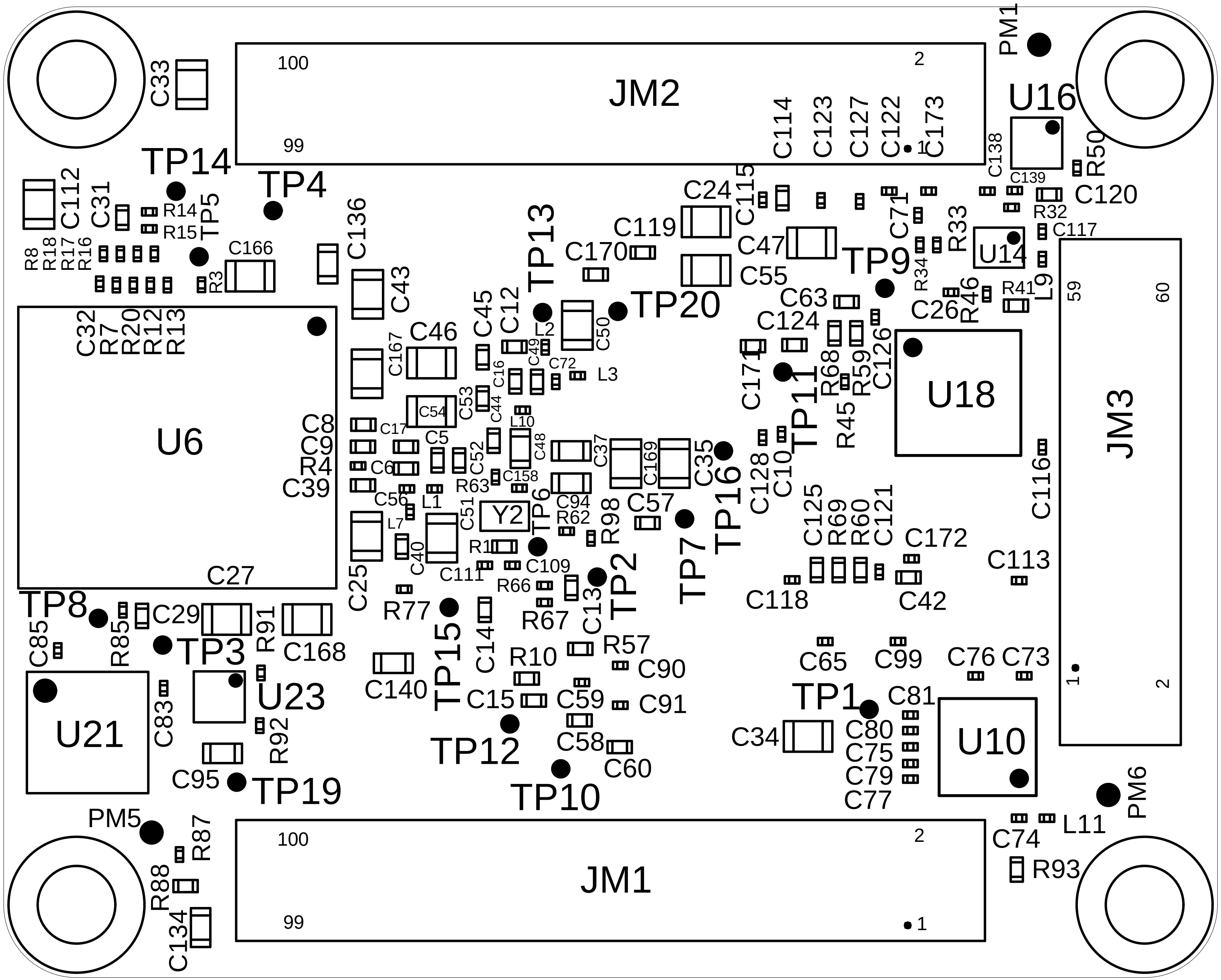
Bottom View