TEBT0808 TRM

Revision v.55

Exported on 2020-10-28

Online version of this document:

https://wiki.trenz-electronic.de/display/PD/TEBT0808+TRM

1 Table of Contents

2 Table of Figures

3 Table of Tables

4 Overview

The Trenz Electronic TEBT0808 is a test fixture for module TE0808(REV02, REV03) and TE0803(REV01) series.

Refer to http://trenz.org/tebt0808-info for the current online version of this manual and other available documentation.

4.1 Key Features

- **Modules**
  - TE0808, TE0803
- **On Board**
  - Done/Error/Status LEDs
  - MEMS Oscillator 125.00 MHz
  - Boot Mode DIP-Switch
  - 2x DIP-Switches to control TE080x power domains
- **Interface**
  - Pin Header for TE0790 JTAG/UART Adapter
  - ARM JTAG header
  - Pin Header for I^2C
  - Board to Board (B2B) Connectors
  - One PL GT with 4x SMA Connectors
  - One PS GT with 4x SMA Connectors
  - One pre-assembled TE0790 XMOD FTDI JTAG adapter
- **Power:**
  - 3.3 V (Nominal Supply Voltage)
- **Dimension:** 90mm x 90mm

4.2 Block Diagram

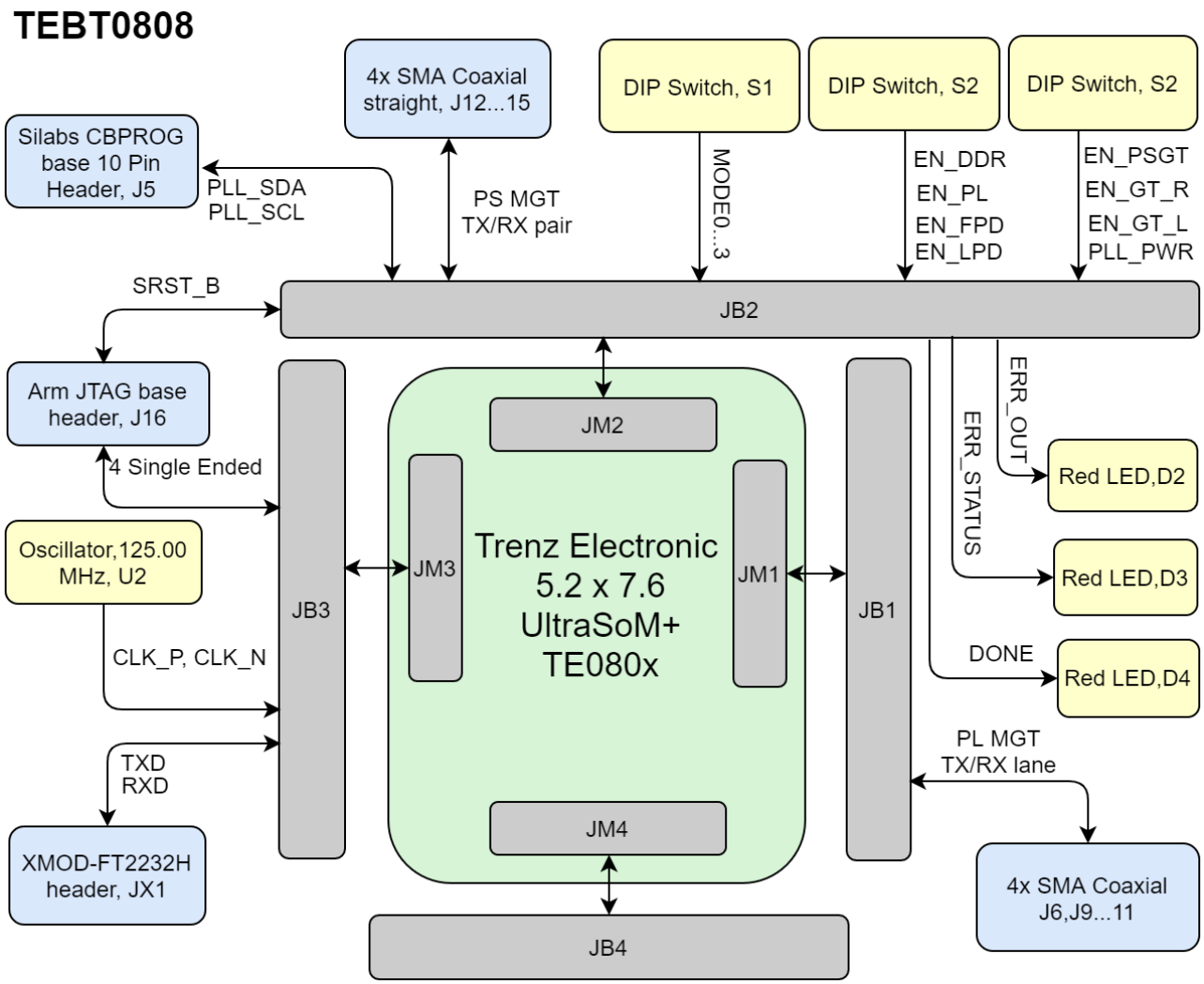

Figure 1: TEBT0808 Block Diagram

4.3 Main Components

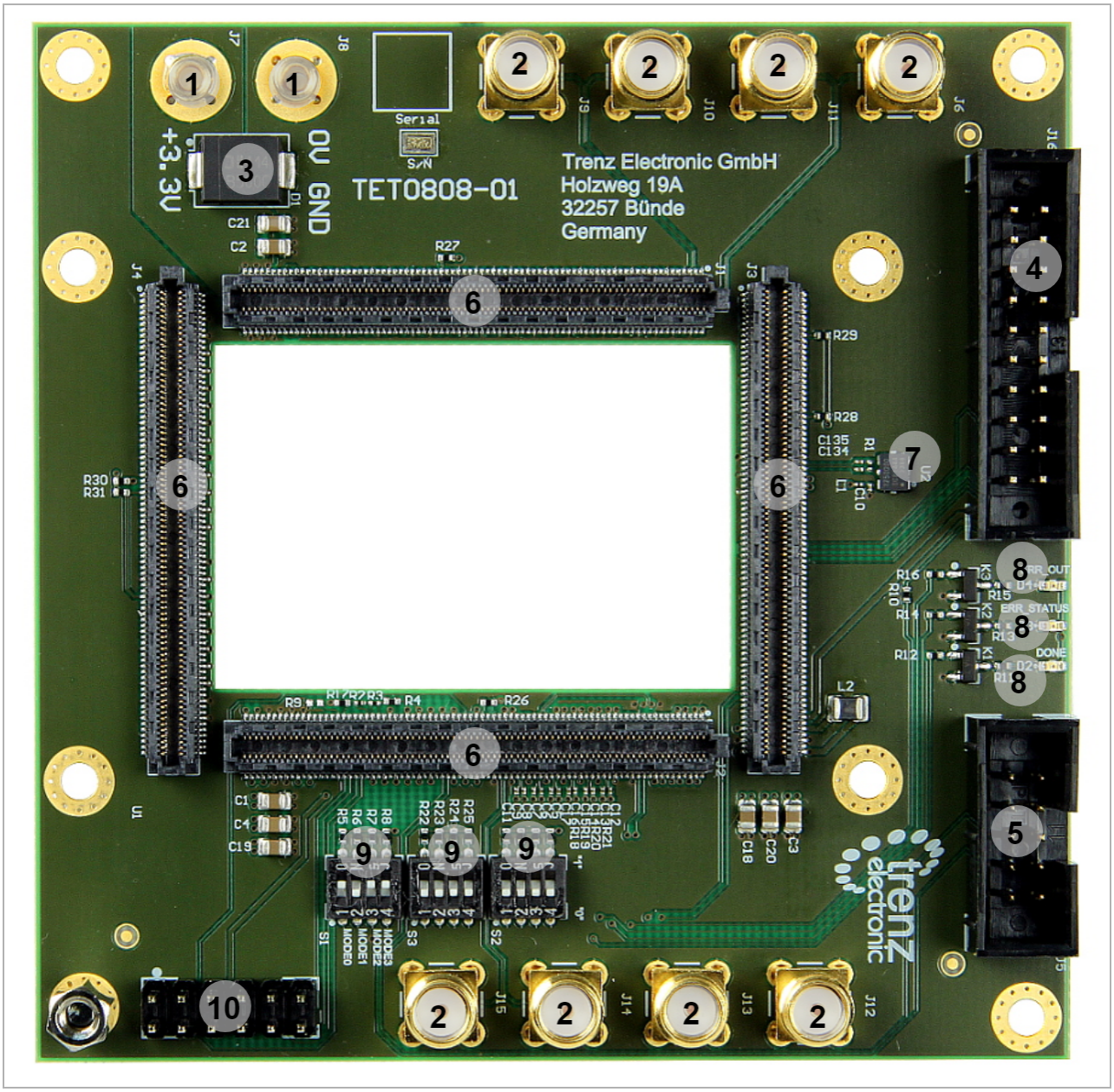

Figure 2: TEBT0808 Main Components

1. Uninsulated Power Jack. J7-J8
2. SMA Coaxial straight. J6- J9...15
3. Surface Mount Schottky Barrier Rectifier. D1
4. ARM PJTAG Pin Header J16
5. I2C Pin Header, J5
6. Board to Board Connectors. J1...4
7. MEMS Oscillator, U2
8. On-Board LEDs, D2...4
9. DIP-Switch, S1...3
10. XMOD header, JX1

4.4 Initial Delivery State

Storage device name	Content	Notes
-	-	-

Table 1: Initial delivery state of programmable devices on the module

4.5 Configuration Signals

Boot mode can be set by DIP-Switch S1.

M3	M2	M1	M0	Bootmode	Bootmode	Notes
ON	ON	ON	ON	0b0000	PS Main JTAG (TE0790 USB JTAG)	DIPs are inverted
ON	ON	OFF	ON	0b0010	SPI Flash (dual parallel, 4bit x 2, 32bit Addressing)	DIPs are inverted
OFF	ON	ON	ON	0b1000	PJTAG(MIO29:26)	DIPs are inverted

Table 2: Boot Process.

Signal	B2B	Note
PLL_RST	J2-89	
SRST_B	J2-96	Connected to PJTAG0_SRST - J16

Table 3: Reset Process.

5 Signals, Interfaces and Pins

5.1 Board to Board (B2B) I/Os

TEBT0808 has four B2B Connectors and each connector has 160 pins. Number of I/O signals and Interfaces connected to the B2B connectors is as following table:

B2B Connector	Interfaces	Number of I/O	Notes
J1	User I/O	46 Single Ended, 23 Differential 16 Single Ended, 8 Differential 16 Single Ended, 8 Differential 16 Single Ended, 8 Differential 4 Single Ended	IOs are Loop-Back IOs are Loop-Back IOs are Loop-Back IOs are Loop-Back PL_1V8
J2	User IO	28 Single Ended, 14 Differential 6 Single Ended, 3 Differential	IOs are Loop-Back IOs are Loop-Back

B2B Connector	Interfaces	Number of I/O	Notes
	Boot Mode	4 Single Ended	MODE0...3
	Control Signals	25 Single Ended	PLL_SEL0, PLL_SEL1, PLL_RST, EN_GTR, EN_PL, PLL_LOLN, EN_PSGT, ERR_STATUS, ERR_OUT,SRST_B, INIT_B, PROG_B, EN_FPD , EN_LPD , DONE, EN_PLL_PWR, PLL_FINC ,PG_PLL_1V8, LP_GOOD, PG_DDR, PG_PL, PG_FPD, PG_PSGT, PG_GT_R, PG_GT_L
	JTAG Interface	7 Single Ended	TCK, TDI, TMS, TDO, MR, Rxd, Txd
	I^2C	2 Single Ended	PLL_SCL, PLL_SDA
	Clock	6 Single Ended, 3 Differential	CLK0, CLK7, CLK8
J3	User IO	24 Single Ended, 12 Differential 24 Single Ended, 12 Differential	Connected to Module FPGA, Bank 48 Connected to Module FPGA, Bank 47
	Clock	6 Single Ended, 3 Differential	CLK228, CLK229, CLK230
	PJTAG Interface	4 Single Ended	PJTAG0_TCK, PJTAG0_TDI, PJTAG0_TMS, PJTAG0_TDO,

B2B Connector	Interfaces	Number of I/O	Notes
	MIO	45 Single Ended	MIO13..77
	UART	2 Single Ended	TXD, RXD
	Power Control Signals	4 Single Ended	PS_1V8, SI_PLL_1V8, VCCO_48, VCCO_47, PLL_3V3
J4	User I/O	48 Single Ended, 24 Differential 48 Single Ended, 24 Differential 4 Single Ended 4 Single Ended	IOs are Loop-Back IOs are Loop-Back B64_T0...3 B65_T0...3
	Power pins	4 Single Ended	VCCO_64, VCCO65

Table 4: General PL I/O to B2B connectors information

5.2 SMA Coaxial Connectors

TEBT0808 is equipped with 8 SMD Coaxial Connectors.

Designator	Schematic	B2B Connector	Notes
J6	B230_TX3_P	J1	

Designator	Schematic	B2B Connector	Notes
J9	B230_RX3_N	J1	
J10	B230_RX3_P	J1	
J11	B230_TX3_P	J1	
J12	B505_TX0_N	J2	
J13	B5050TX0_P	J2	
J14	B505_RX0_N	J2	
J15	B505_RX0_P	J2	

Table 5: SMD Coaxial Connectors

5.3 XMOD JTAG

JTAG access to the TEBT080X is available through B2B connector JB2 using XMOD adapter TE0790[1].

JTAG Signal	B2B Connector	Notes
TMS	J2- 126	
TDI	J2- 122	
TDO	J2- 124	
TCK	J2- 120	

Table 6: JTAG Pins Connection
The voltages 3.3V (VCC) and VIO (variable SC CPLD I/O-voltage) on TE0790 can be configured by the DIP-switch S2 which must be set as following.

DIP Switch,S2	Default	Description
1	ON	Update Mode JTAG access to SC CPLD only
2	OFF	Must be always in OFF state.
3	OFF	VIO is supplied from Module

1 https://wiki.trenz-electronic.de/display/PD/TE0790+-+XMOD

DIP Switch,S2	Default	Description
4	OFF	3.3V is supplied by the carrier TEBT0808

Table 7: Xmod Adapter DIP-Switch Setting Description

5.4 PJTAG

PJTAG access to the TEBT0808 is available through B2B connector JB3.

JTAG Signal	B2B Connector	Notes
PJTAG_TMS	J3- 94	
PJTAG_TDI	J3- 90	
PJTAG_TDO	J3- 92	
PJTAG_TCK	J3- 88	
PJTAG_SRST	J2- 96	Connected to SRST_B

Table 8: PJTAG Pins Connection

5.5 Pin header

The I2C signals can be accessed through pin header J5.

Signals	B2B Connector	Pin Header	Notes
PLL_SCL	J2- 90	J5- 3	
PLL_SDA	J2- 92	J5- 7	

Table 9: I2C Connections

5.6 Test Points

Test Point	Signals	B2B Connector	Notes
TP 1	DDR_1V2	J2-135	
TP 2	PG_PSGT	J2-82	

Test Point	Signals	B2B Connector	Notes
TP 3	ERR_STATUS	J2-86	
TP 4	PLL_FDEC	J2-94	
TP 5	EN_LPD	J2-108	
TP 6	EN_DDR	J2-112	
TP 7	PG_PL	J2-104	
TP 8	PG_PLL_1V8	J2-80	
TP 9	N_PSGT	J2-84	
TP 10	ERR_OUT	J2-88	
TP 11	EN_FPD	J2-102	
TP 12	LP_GOOD	J2-106	
TP 13	PG_FPD	J2-110	
TP 14	PG_DDR	J2-114	
TP 15	EN_PLL_PWR	J2-77	
TP 16	PLL_FINC	J2-81	
TP 17	PG_GT_R	J2-91	
TP 18	EN_GT_R	J2-95	
TP 19	EN_PL	J2-101	
TP 20	EN_GT_L	J2-79	
TP 21	PLL_SEL0	J2-93	
TP 22	PG_GT_L	J2-97	
TP 23	INIT_B	J2-98	
TP 24	IN1_P	J2-4	
TP 25	PLL_SEL1	J2-87	

Test Point	Signals	B2B Connector	Notes
TP 26	PLL_LOLN	J2-85	
TP 27	PLL_RST	J2-89	
TP 28	DX_P	J2-119	
TP 29	DX_N	J2-121	
TP 30	IN1_N	J2-6	
TP 31	B505_CLK0_P	J2-10	
TP 32	B505_CLK0_N	J2-12	
TP 33	B505_CLK1_P	J2-16	
TP 34	B505_CLK1_N	J2-18	
TP 35	B128_CLK1_P	J2-22	
TP 36	B128_CLK1_N	J2-24	
TP 37	CLK0_N	J2-1	
TP 38	CLK0_P	J2-3	
TP 39	CLK8_P	J2-7	
TP 40	CLK8_N	J2-9	
TP 41	CLK7_P	J2-13	
TP 42	CLK7_N	J2-15	
TP 43	IN2_P	J3-66	
TP 44	IN2_N	J3-68	
TP 45	B230_CLK1_N	J3-59	
TP 46	B230_CLK1_P	J3-61	
TP 47	B229_CLK0_N	J3-65	
TP 48	B229_CLK0_P	J3-67	

Test Point	Signals	B2B Connector	Notes
TP 49	PLL_3V3	J3-152	
TP 50	GND	J3-155	
TP 51	PL_1V8	J1-121	
TP 52	PS_1V8	J3-147	
TP 53	SI_PLL_1V8	J3-151	
TP 54	PROG_B	J2-100	
TP 55...56	GND	-	

Table 10: Test Points Information

6 On-board Peripherals

Chip/Interface	Designator	Notes
DIP Switch(see page 18)	S1...3	
LEDs(see page 19)	D2...4	Red LEDs
Oscillator(see page 19)	U2	125.00 MHz

Table 11: On Board Peripherals

6.1 DIP Switch

There are three DIP Switches, S1, S2, S3.

The Boot Mode can be set through DIP Switch S1, refer to BootMode (see page 9)table.

DIP Switch S1	Signals	B2B	Notes
S1A	MODE0	J2-109	
S1B	MODE1	J2-107	
S1C	MODE2	J2-105	
S1D	MODE3	J2-103	

Table 12: DIP Switch S1
Control signals must be set using DIP Switch S2, S3.

DIP Switch S2	Signals	B2B	Notes
S2A	EN_PSGT	J2-84	Position OFF enables power rail
S2B	EN_GT_R	J2-95	Position OFF enables power rail
S2C	EN_GT_L	J2-97	Position OFF enables power rail
S2D	EN_PLL_PWR	J2-77	Position OFF enables power rail, connected to PG_PL

Table 13: DIP Switch S2

DIP Switch S3	Signals	B2B	S3 switch	Notes
S3A	EN_DDR	J2-112	S3A	Position OFF enables power rail

DIP Switch S3	Signals	B2B	S3 switch	Notes
S3B	EN_LPD	J2-108	S3B	Position OFF enables power rail
S3C	EN_PL	J2-101	S3C	Position OFF enables power rail
S3D	EN_FPD	J2-102	S3D	Position OFF enables power rail

Table 14: DIP Switch S3

6.2 LEDs

Designator	Color	Connected to	Active Level	Note
D2	Red	DONE	Active High	Non User LED
D3	Red	ERR_STATUS	Active High	Non User LED
D4	Red	ERR_OUT	Active High	Non User LED

Table 15: On-board LEDs

6.3 Clock Sources

Designator	Description	Frequency	Note
U2	MEMS Oscillator	125.00 MHz	

Table 16: Osillators

7 Power and Power-On Sequence

7.1 Power Supply

2,0mm MC LB2	Note
J7	3.3V direct modules power supply
J8	GND

Table 17: Power Consumption

7.2 Power Consumption

Minimum current depends mainly on design and cooling solution. Use Xilinx Power Estimator and/or Your Vivado Project to estimate min current. Minimum of 3A are recommanded for basic functionality.

Power Input Pin	Typical Current
3.3V	TBD*

Table 18: Power Consumption
* TBD - To Be Determined

7.3 Power Distribution Dependencies

Input oower sourced directly the module, Only one Diode D1 is used for inverse polarity protection.

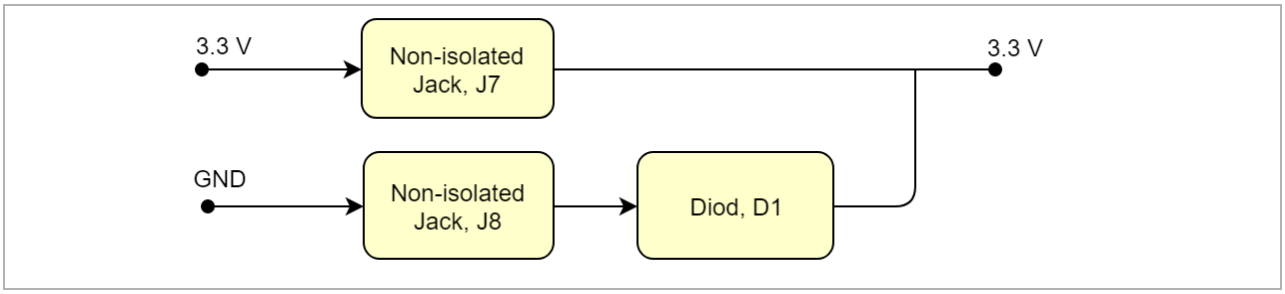

Figure 3: Power Distribution

7.4 Power Rails

Power Rail Name	B2B J1 Pins	B2B J2 Pins	B2B J3 Pins	Directions	Note
PL_DCIN	151, 153, 155, 157, 159	-	-	Output	-
DCDCIN	-	154, 156, 158, 160, 153, 155, 157, 159	-	Output	-
LP_DCDC	-	138, 140, 142, 144	-	Output	-
PS_BATT	-	125	-	Output	-
GT_DCDC	-	-	157, 158, 159, 160	Output	-
PLL_3V3	-	-	152	Output	-
SI_PLL_1V8	-	-	151	Input	-
PS_1V8	-	99	147, 148	Input	-
PL_1V8	91, 121	-	-	Input	-
DDR_1V2	-	135	-	Input	-

Table 19: Module power rails.

8 Board to Board Connectors

5.2 x 7.6 cm UltraSoM+ modules use four Samtec Razor Beam LP Terminal Strip (ST5[2]) on the bottom side.

- 4x REF-192552-02 (160-pins)
  - ST5 Mates with SS5

5.2 x 7.6 cm UltraSoM+ carrier use four Samtec Razor Beam LP Socket Strip (SS5[3]) on the top side.

- 4x REF192552-01 (160-pins)
  - SS5 Mates with ST5

8.1 Features

- Board-to-Board Connector 160-pins, 80 contacts per row
- Ultrafine .0197" (0.50 mm) pitch
- Narrow body design saves space on board
- Lead style -03.5
- Samtec 28+ Gbps Solution
- Mates with: ST5
- Insulator Material: Liquid Crystal Polymer, schwarz
- Operating Temperature Range: -55°C bis +125°C
- Lead-Free Solderable: Yes
- RoHS Konform: Yes

8.2 Connector Stacking height

When using the standard type on baseboard and module, the mating height is 5 mm.

Other mating heights are possible by using connectors with a different height:

Order number	REF number	Samtec Number	Type	Contribution to stacking height	Comment
27219	REF192552-01	SS5-80-3.50-L-D-K-TR	Baseboard connector	3.5mm	Standard connector used on carrier
27018	REF-189545-02	SS5-80-3.00-L-D-K-TR	Baseboard connector	3 mm	Assembly option on request

2 https://www.samtec.com/products/st5
3 https://www.samtec.com/products/st5

Order number	REF number	Samtec Number	Type	Contribution to stacking height	Comment
27220	REF-192552-02	ST5-80-1.50-L-D-P-TR	Module connector	1.5 mm	Standard connector used on modules
27017	REF-189545-01	ST5-80-1.00-L-D-P-TR	Module connector	1 mm	Assembly option on request

Table 20: Connectors.

The module can be manufactured using other connectors upon request.

8.3 Current Rating

Current rating of Samtec Razor Beam LP Terminal/Socket Strip ST5/SS5 B2B connectors is 1.5 A per pin (1 pin powered per row).

8.4 Connector Speed Ratings

The connector speed rating depends on the stacking height:

Stacking height	Speed rating
4 mm, Single-Ended	13GHz/26Gbps
4 mm, Differential	13.5GHz/27Gbps
5 mm, Single-Ended	13.5GHz/27Gbps
5 mm, Differential	20GHz/40 Gbps

Table 21: Speed rating.
The SS5/ST5 series board-to-board spacing is currently available in 4mm (0.157"), 4.5mm (0.177") and 5mm (0.197") stack heights.

The data in the reports is applicable only to the 4mm and 5mm board-to-board mated connector stack height.

9 Technical Specifications

9.1 Absolute Maximum Ratings

Symbols	Min	Max	Unit	Note
VIN	-0.3	4	V	VIN is connected directly to module
Storage Temperatur	-40	+85	°C	See DIP Switch, CHS-04TA datasheet

Table 22: PS absolute maximum ratings

9.2 Recommended Operating Conditions

Operating temperature range depends also on customer design and cooling solution. Please contact us for options.

Symbols	Min	Max	Unit	Note
VIN	3,14	3.47	V	Check also TRM of the connected module
Operating Temperatur	-40	+85	°C	

Table 23: Recommended operating conditions.

9.3 Physical Dimensions

- Module size: 90 mm × 90 mm. Please download the assembly diagram for exact numbers.
- Mating height with standard connectors: 3.5 mm.

PCB thickness: 1.6 mm.

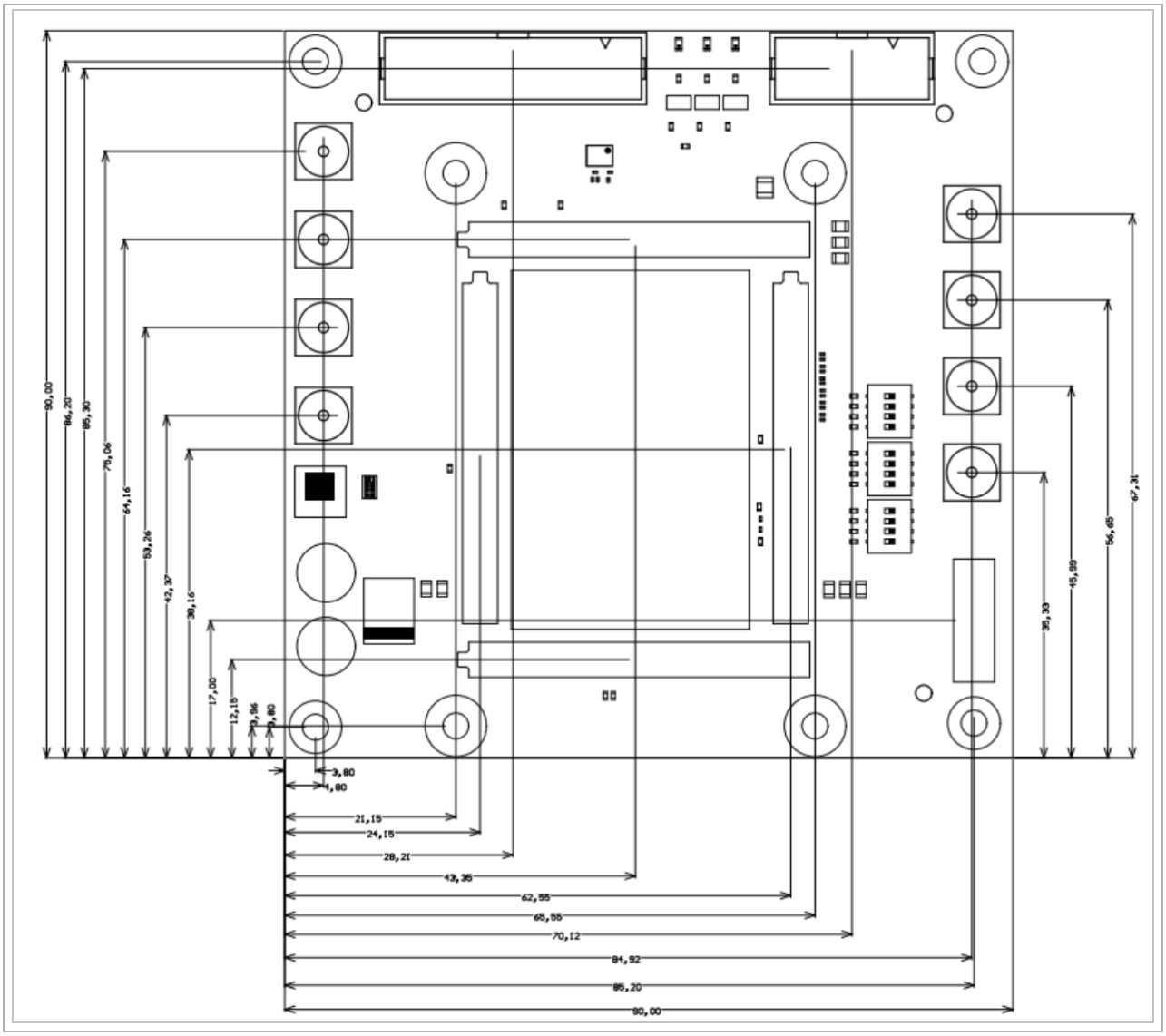

Figure 4: Physical Dimension

10 Currently Offered Variants

Trenz shop TEBT0808 overview page	
English page[4]	German page[5]

Table 24: Trenz Electronic Shop Overview

4 https://shop.trenz-electronic.de/en/search?sSearch=TEBT0808
5 https://shop.trenz-electronic.de/de/search?sSearch=TEBT0808

11 Revision History

11.1 Hardware Revision History

Date	Revision	Changes	Documentation Link
2016-05-30	01	Initial Release	REV01[6]

Table 25: Hardware Revision History

Hardware revision number can be found on the PCB board together with the module model number separated by the dash.

Figure 5: Board hardware revision number.

11.2 Document Change History

Date	Revision	Contributor	Description
2020-10-28	v.55(see page 6)	Vadim Yunitski[7]	• Updated block diagram
2020-05-11	v.54	John Hartfiel	• add notes to DIP section • Correction on configuration signal section
2020-01-24	v.49	Pedram Babakhani	• Initial Release
--	all	Edit[8] Pedram Babakhani[9] , John Hartfiel[10] , Vadim Yunitski[11]	• --

Table 26: Document change history.

6 https://shop.trenz-electronic.de/Download/?path=Trenz_Electronic/Modules_and_Module_Carriers/5.2x7.6/5.2x7.6_Carriers/TEBT0808/REV01
7 https://wiki.trenz-electronic.de/display/~v.yunitzki
8 https://wiki.trenz-electronic.de/pages/resumedraft.action?draftId=43680922&draftShareId=5aa87536-d3b6-4ef4-a51e-525635762e47
9 https://wiki.trenz-electronic.de/display/~P.Babakhani
10 https://wiki.trenz-electronic.de/display/~j.hartfiel
11 https://wiki.trenz-electronic.de/display/~v.yunitzki

12 Disclaimer

12.1 Data Privacy

Please also note our data protection declaration at https://www.trenz-electronic.de/en/Data-protection-Privacy

12.2 Document Warranty

The material contained in this document is provided “as is” and is subject to being changed at any time without notice. Trenz Electronic does not warrant the accuracy and completeness of the materials in this document. Further, to the maximum extent permitted by applicable law, Trenz Electronic disclaims all warranties, either express or implied, with regard to this document and any information contained herein, including but not limited to the implied warranties of merchantability, fitness for a particular purpose or non infringement of intellectual property. Trenz Electronic shall not be liable for errors or for incidental or consequential damages in connection with the furnishing, use, or performance of this document or of any information contained herein.

12.3 Limitation of Liability

In no event will Trenz Electronic, its suppliers, or other third parties mentioned in this document be liable for any damages whatsoever (including, without limitation, those resulting from lost profits, lost data or business interruption) arising out of the use, inability to use, or the results of use of this document, any documents linked to this document, or the materials or information contained at any or all such documents. If your use of the materials or information from this document results in the need for servicing, repair or correction of equipment or data, you assume all costs thereof.

12.4 Copyright Notice

No part of this manual may be reproduced in any form or by any means (including electronic storage and retrieval or translation into a foreign language) without prior agreement and written consent from Trenz Electronic.

12.5 Technology Licenses

The hardware / firmware / software described in this document are furnished under a license and may be used / modified / copied only in accordance with the terms of such license.

12.6 Environmental Protection

To confront directly with the responsibility toward the environment, the global community and eventually also oneself. Such a resolution should be integral part not only of everybody's life. Also enterprises shall be conscious of their social responsibility and contribute to the preservation of our common living space. That is why Trenz Electronic invests in the protection of our Environment.

12.7 REACH, RoHS and WEEE

REACH

Trenz Electronic is a manufacturer and a distributor of electronic products. It is therefore a so called downstream user in the sense of REACH[12]. The products we supply to you are solely non-chemical products (goods). Moreover and under normal and reasonably foreseeable circumstances of application, the goods supplied to you shall not release any substance. For that, Trenz Electronic is obliged to neither register nor to provide safety data sheet. According to present knowledge and to best of our knowledge, no SVHC (Substances of Very High Concern) on the Candidate List[13] are contained in our products. Furthermore, we will immediately and unsolicited inform our customers in compliance with REACH - Article 33 if any substance present in our goods (above a concentration of 0,1 % weight by weight) will be classified as SVHC by the European Chemicals Agency (ECHA)[14].

RoHS

Trenz Electronic GmbH herewith declares that all its products are developed, manufactured and distributed RoHS compliant.

WEEE

Information for users within the European Union in accordance with Directive 2002/96/EC of the European Parliament and of the Council of 27 January 2003 on waste electrical and electronic equipment (WEEE).

Users of electrical and electronic equipment in private households are required not to dispose of waste electrical and electronic equipment as unsorted municipal waste and to collect such waste electrical and electronic equipment separately. By the 13 August 2005, Member States shall have ensured that systems are set up allowing final holders and distributors to return waste electrical and electronic equipment at least free of charge. Member States shall ensure the availability and accessibility of the necessary collection facilities. Separate collection is the precondition to ensure specific treatment and recycling of waste electrical and electronic equipment and is necessary to achieve the chosen level of protection of human health and the environment in the European Union. Consumers have to actively contribute to the success of such collection and the return of waste electrical and electronic equipment. Presence of hazardous substances in electrical and electronic equipment results in potential effects on the environment and human health. The symbol consisting of the crossed-out wheeled bin indicates separate collection for waste electrical and electronic equipment.

Trenz Electronic is registered under WEEE-Reg.-Nr. DE97922676.

2019-06-07

12 http://guidance.echa.europa.eu/
13 https://echa.europa.eu/candidate-list-table
14 http://www.echa.europa.eu/