TE0817 TRM

Revision v.13

Exported on 2022-11-10

Online version of this document:

https://wiki.trenz-electronic.de/display/PD/TE0817+TRM

1 Table of Contents

2 Table of Figures

3 Table of Tables

4 Overview

The Trenz Electronic TE0817 is an industrial grade MPSoC SOM integrating a Xilinx Zynq UltraScale+ MPSoC, DDR4 SDRAM with 64-Bit width data bus connection, SPI Boot Flash memory for configuration and operation, transceivers and powerful switch-mode power supplies for all on-board voltages. A large number of configurable I/Os is provided via rugged high-speed stacking connections in a compact 5.2 cm x 7.6 cm form factor.

Refer to http://trenz.org/te0817-info for the current online version of this manual and other available documentation.

4.1 Key Features

- **SoC**
  - Device: ZU4 / ZU5 / ZU7 [1)]
  - Engine: CG / EG / EV [1)]
  - Speedgrade: -1 / -2 / -3 [1)]
  - Temperature Range: Extended / Industrial [1)]
  - Package: FBVB900
- **RAM/Storage**
  - 4 GByte DDR4 SDRAM [2)]
  - 2 x 64 MByte Serial Flash [3)]
  - EEPROM with MAC address
- **On Board**
  - Oscillator
- **Interface**
  - 4 x B2B Connector (ADM6)
    - up to 204 PL IO
      - HP: 156
      - HD: 48
    - up to 65 PS MIO
    - 4 GTR
    - 16 GTH
    - I2C, JTAG
- **Power**
  - 3.3 V power supply via B2B Connector needed [4)].
- **Dimension**
  - 76 mm x 52 mm
- **Notes**

  [1)] Please, take care of the possible assembly options. Furthermore, check whether the power supply is powerful enough for your FPGA design.

  [2)] Up to 32 GByte are possible with a maximum bandwidth of 2400 MBit/s.

  [3)] Please, take care of the possible assembly options.

  [4)] Dependant on the assembly option a higher input voltage may be possible.

4.2 Block Diagram

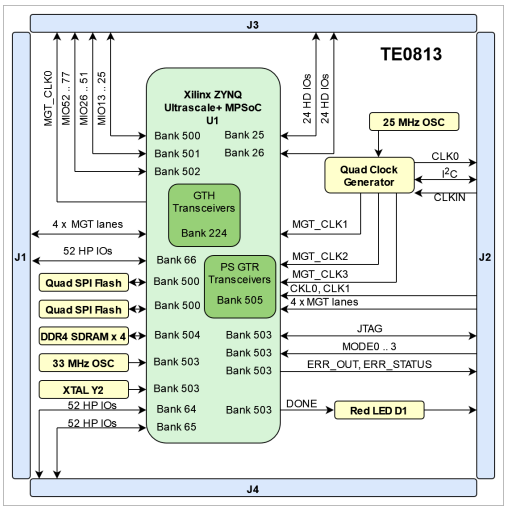

Figure 1: TE0817 block diagram

4.3 Main Components

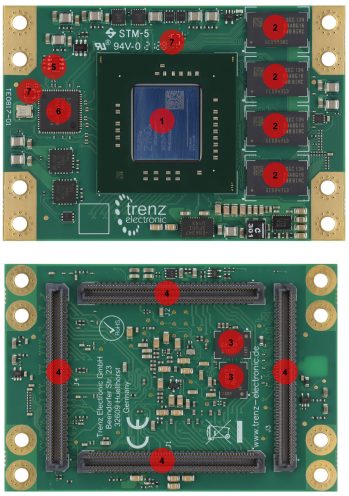

Figure 2: TE0817 main components

1. SoC, U1
2. DDR4, U2, U3, U9, U12
3. Quad SPI Flash, U7, U17
4. Connector, J1, J2, J3, J4
5. EEPROM, U11
6. Clock Generator, U5
7. Oscillator, U25, U32

4.4 Initial Delivery State

Storage device name	Content	Notes
DDR4 SDRAM	not programmed	
Quad SPI Flash	not programmed	
EEPROM	not programmed besides factory programmed MAC address	
Programmable Clock Generator	not programmed	

Table 1: Initial delivery state of programmable devices on the module

5 Signals, Interfaces and Pins

5.1 Connectors

Connector Type	Designator	Interface	IO CNT [1)]	Notes
B2B	JM1	MGT PL	12 x MGT (RX/TX)	
B2B	JM1	HP	52 SE / 24 DIFF	
B2B	JM2	MGT PS	2 x MGT CLK	
B2B	JM2	CLK	DIFF CLK	
B2B	JM2	MGT PL	4 x MGT (RX/TX)	
B2B	JM2	MGT PS	4 x MGT (RX/TX)	
B2B	JM2	CFG	JTAG	
B2B	JM2	CFG	MODE	
B2B	JM3	HD	48 SE / 24 DIFF	
B2B	JM3	MGT PL	3 x MGT CLK	
B2B	JM3	CLK	DIFF CLK	
B2B	JM3	MIO	65 GPIO	
B2B	JM4	HP	104 SE / 48 DIFF	

Table 2: Board Connectors

[1)] IO CNT depends on assembly variant. E.g. the MGTs are not available for all FPGAs

5.2 Test Points

Test Point	Signal	Notes[1)]
TP1	PLL_SCL	pulled-up to SI_PLL_1V8
TP2	PLL_SDA	pulled-up to SI_PLL_1V8
TP5	GND	
TP6	TCK	
TP7	TDI	
TP8	TDO	
TP9	TMS	
TP12	PL_VCCINT	
TP15	FP_0V85	
TP16	DDR_2V5	
TP17	DCDC_2V0	
TP18	DDR_PLL	
TP20	PL_VCU	
TP23	VTT	
TP24	AUX_R	
TP25	AVTT_R	
TP26	AVCC_R	
TP27	PS_PLL	
TP28	PS_AVTT	

Test Point	Signal	Notes[1)]
TP29	PS_AUX	
TP30	PS_AVCC	
TP31	LP_0V85	
TP32	GND	

Table 3: Test Points Information

[1)] Direction:

- IN: Input from the point of view of this board.
- OUT: Output from the point of view of this board.

6 On-board Peripherals

Chip/Interface	Designator	Connected To	Notes
DDR4 SDRAM	U2, U3, U9, U12	SoC - PS	
Quad SPI Flash	U7, U17	SoC - PS	Booting.
EEPROM	U11	B2B - J2	
Clock Generator	U5	SoC, B2B	
Oscillator	U25	Clock Generator	25 MHz
Oscillator	U32	SoC	33.333333 MHz

Table 4: On board peripherals

7 Configuration and System Control Signals

Connector+Pin	Signal Name	Direction 1)	Description
JM1.A45	POR_OVERRIDE	IN	Override power-on reset delay 2).
JM2.A30	PG_PLL_1V8	OUT	SI_PLL_1V8 power rail powered-up.
JM2.A31	ERR_OUT	OUT	PS error indication 2).
JM2.A34	ERR_STATUS	OUT	PS error status 2).
JM2.A35	LP_GOOD	OUT	Low-power domain powered-up. Pulled up to 3.3VIN
JM2.A36	PLL_SCL	IN	I2C clock
JM2.A37	PLL_SDA	IN/OUT	I2C data
JM2.A40	PG_VCU	OUT	VCU power rail powered-up.
JM2.A41	EN_PSGT	IN	Enable GTR transceiver power-up.
JM2.A44 / JM2.A45 / JM2.A46 / JM2.A47	TCK / TDI / TDO / TMS	Signal-dependent	JTAG configuration and debugging interface. JTAG reference voltage: PS_1V8
JM2.B29	PG_PSGT	OUT	GTR transceivers powered-up.
JM2.B30	PROG_B	IN/OUT	Power-on reset 2). Pulled-up to PS_1V8.
JM2.B33	SRST_B	IN	System reset 2). Pulled-up to PS_1V8.
JM2.B34	INIT_B	IN/OUT	Initialization completion indicator after POR 2). Pulled-up to PS_1V8.

Connector+Pin	Signal Name	Direction 1)	Description
JM2.B37	PG_PL	OUT	Programmable logic powered-up.
JM2.B38	EN_FPD	IN	Enable full-power domain power-up.
JM2.B41	PG_FPD	OUT	Full-power domain powered-up.
JM2.B42	EN_LPD	IN	Enable low-power domain power-up.
JM2.B45	PG_DDR	OUT	DDR power supply powered-up.
JM2.B46	DONE	OUT	PS done signal 2). Pulled-up to PS_1V8.
JM2.B47	EN_DDR	IN	Enable DDR power-up.
JM2.C30	EN_GT_L	IN	Not connected.
JM2.C31	MR	IN	Manual reset.
JM2.C32	PLL_SEL0	IN	PLL clock selection.
JM2.C33	PLL_RST	IN	PLL reset.
JM2.C35	EN_PL	IN	Enable programable logic power-up.
JM2.C36	EN_GT_R	IN	Enable GTH transceiver power-up.
JM2.C37	PLL_FDEC	IN	PLL Frequency decrementation.
JM2.C44 / JM2.C45 / JM2.C46 / JM2.C47	MODE3..0	IN	Boot mode selection 2): • JTAG • QUAD-SPI (32 Bit) • SD1 (2.0) • eMMC (1.8 V) • SD1 LS (3.0) Supported Modes depends also on used Carrier.

Connector+Pin	Signal Name	Direction 1)	Description
JM2.D29	EN_PLL_PWR	IN	Enable PLL power supply.
JM2.D30	PLL_FINC	IN	PLL Frequency incrementation.
JM2.D31	PLL_LOLn	OUT	Loss of lock status.
JM2.D32	PLL_SEL1	IN	PLL clock selection.
JM2.D33	PG_GT_R	OUT	GTH Transceivers powered-up.
JM2.D37	PSBATT	IN	PS RTC Battery supply voltage 2) 3).
JM2.D38	PUDC_B	IN	Configuration pull-ups setting 2). Pulled-up to PL_1V8.
JM2.D45 / JM2.D46	DX_P / DX_N	-	SoC temperatur sensing diode pins 2).

Table 5: Controller signal.

1) Direction:

- IN: Input from the point of view of this board.
- OUT: Output from the point of view of this board.

2) See UG1085 for additional information.

3) See Recommended Operating Conditions(see page 25).

8 Power and Power-On Sequence

8.1 Power Rails

Power Rail Name/ Schematic Name	Connector.Pin	Direction[1)]	Notes
VCCO_66	JM1.A32 / JM1.A33	IN	
VREF_66	JM1.A41	IN	
3.3VIN	JM1.A54 / JM1.A55 / JM1.B55 / JM1.B56	IN	
PL_1V8	JM1.C32 / JM1.C33 / JM1.D33 / JM1.D34	OUT	
PL_DCIN	JM1.C56 / JM1.C57 / JM1.C58 / JM1.C59 / JM1.C60 / JM1.D56 / JM1.D57 / JM1.D58 / JM1.D59 / JM1.D60	IN	
LP_DCDC	JM2.A50 / JM2.A51 / JM2.A52 / JM2.B50 / JM2.B51 / JM2.B52 / JM2.C50 / JM2.C51 / JM2.C52 / JM2.D50 / JM2.D51 / JM2.D52	IN	
DCDCIN	JM2.A57 / JM2.A58 / JM2.A59 / JM2.A60 / JM2.B57 / JM2.B58 / JM2.B59 / JM2.B60 / JM2.C57 / JM2.C58 / JM2.C59 / JM2.C60 / JM2.D57 / JM2.D58 / JM2.D59 / JM2.D60 /	IN	
PS_BATT	JM2.D37	IN	
DDR_1V2	JM2.D47	OUT	

Power Rail Name/ Schematic Name	Connector.Pin	Direction[1)]	Notes
PS_1V8	JM2.C34 / JM2.D34 / JM3.A56 / JM3.B56 / JM3.C56 / JM3.D56	OUT	
PLL_3V3	JM3.A55	IN	
GT_DCDC	JM3.A59 / JM3.A60 / JM3.B59 / JM3.B60 / JM3.C59 / JM3.C60 / JM3.D59 / JM3.D60 /	IN	
VCCO_48	JM3.C7 / JM3.C8 / JM3.D8 / JM3.D9	IN	
VCCO_47	JM3.C19 / JM3.C20 / JM3.D20 / JM3.D21	IN	
VCCO_64	JM4.B21 / JM4.B39	IN	
VREF_64	JM4.B30	IN	
VCCO_65	JM4.C21 / JM4.C39	IN	
VREF_65	JM4.C30	IN	

Table 6: Module power rails.

[1)] Direction:

- IN: Input from the point of view of this board.
- OUT: Output from the point of view of this board.

8.2 Recommended Power up Sequencing

The power up sequencing highly depends on the use case. In general, it should be possible to enable/disable the processing system (PS) / programmable logic (PL) independently. Furthermore, within the processing logic it should be possible to enable/disable only low-power domain and/or low-power and full-power domain. Additionally, usage of GTR for PS side and GTH for PL side should be possible. Because of this flexibility the needed parts of the following table needs to be selected individually. For detailed information take a look into schematics.

Sequence	Net name	Recommended Voltage Range	Pull-up/ down	Description	Notes
0	-	-	-	Configuration signal setup.	See Configuration and System Control Signals(see page 13).
1 [1)]	PSBATT	1.2 V ... 1.5 V	-	Battery connection.	Battery Power Domain usage. When not used, tie to GND.
1	3.3VIN	3.3 V (± 5 %)	-	Management power supply.	Management module power supply. 0.5 A recommended.
GTH / GTR Transceiver clocking (Only necessary in cases where the PLL clock is used for GTH / GTH.):					
1 [1)]	GT_DCDC	3.3 V (± 5 %) [2)]		GTH transceiver power supply.	Main module power supply for GTH / GTY transceiver. 5 A recommended. Power consumption depends mainly on design and cooling solution.
1 [1)]	EN_PLL_PWR	-	PD [3)], GND	PLL power enable.	
1 [1)]	PG_PLL_1V8	-	PU [3)], 3.3 V	PLL power good status.	
2	Processing System (PS):			Procedure for PS starting.	
2.1	Low-power domain:			Bring-up for low-power domain PS.	
2.1.1	LP_DCDC	3.3 V (± 5 %) [2)]	-	Low-power domain power supply.	Main module power supply for low-power domain. 5.5 A

Sequence	Net name	Recommended Voltage Range	Pull-up/ down	Description	Notes
					recommended. Power consumption depends mainly on design and cooling solution.
2.1.2	EN_LPD	-	PU [3], 3.3 V	Low-power domain power enable.	
2.1.3	LP_GOOD	-	PU [3], 3.3 V	Low-power domain power good status.	Module power-on sequencing for low-power domain finished.
2.2	Full-power domain:			Bring-up for full-power domain PS.	Full-power PS domain needs powered low-power PS domain.
2.2.1	DCDCIN	3.3 V (± 5 %) [2]		Full-power domainand GTR transceiver power supply.	Main module power supply for full-power domain. 7 A recommended. Power consumption depends mainly on design and cooling solution.
2.2.2	EN_FPD	3.3 V	-	Full-power domain power enable.	
2.2.3	PG_FPD	-	PU [3], 3.3 V	Full-power domain power good status.	Module power-on sequencing for full-power domain finished.
2.2.4	EN_DDR	3.3 V	-	DDR memory power enable.	
2.2.5	PG_DDR		PU [3], 3.3 V	DDR memory power good status.	Module power-on sequencing for DDR memory finished.

Sequence	Net name	Recommended Voltage Range	Pull-up/ down	Description	Notes
2.3	GTR Transceiver			Procedure for GTR transceiver starting.	PS transceiver usage needs powered PS (low- and full-power domain).
2.3.1	EN_PSGT	3.3 V	-	GTR transceiver power enable.	
2.3.2	PG_PSGT	-	PU [3], 3.3 V	GTR transceiver power good status.	Module power-on sequencing for GTR transceiver finished.
2	Programmable Logic (PL)			Procedure for PL starting.	PS and PL can be started independently.
2.1	PL_DCIN	3.3 V (± 5 %) [2] [4]	-	Programmable logic power supply.	Main module power supply for programmable logic. 12 A recommended. Power consumption depends mainly on design and cooling solution.
2.2	EN_PL	-	PU [3], 3.3 V	Programmable logic power enable.	
2.3	PG_PL	-	PU [3], 3.3 V	Programmable logic power good status.	Module power-on sequencing for programmable logic finished. Periphery and variable bank voltages can be enabled on carrier.
2.4	VCCO_47 / VCCO_48 / VCCO_64 /	[5]	-	Module bank voltages.	Enable bank voltages after PG_PL deassertion.

Sequence	Net name	Recommended Voltage Range	Pull-up/ down	Description	Notes
	VCCO_65 / VCCO_66				
2.5	PG_VCU	-	PU [3], 3.3 V	VCU power good status.	
3	GTH / GTY Transceiver			Procedure for GTH / GTY transceiver starting.	PL transceiver usage needs powered PL and low-power PS domain.
3.1	GT_DCDC	3.3 V (± 5 %) [2]	-	GTH transceiver power supply.	Main module power supply for GTH transceiver. 5 A recommended. Power consumption depends mainly on design and cooling solution.
3.2	EN_GT_R	3.3 V	-	GTH / GTY transceiver power enable.	
3.3	PG_GT_R	-	PU [3], 3.3 V	GTH / GTY transceiver power good status.	

Table 7: Baseboard Design Hints

[1] (optional)

[2] Dependent on the assembly option a higher input voltage may be possible.

[3] (on module)

[4] This value depends highly on DCDC U4. Higher values may be possible with different DCDCs. For more information consult schematic and according datasheets.

[5] See DS925 for additional information.

9 Board to Board Connectors

5.2 x 7.6 cm UltraSoM+ modules use four Samtec AcceleRate HD High-Density Slim Body Arrays on bottom side.

- 4x ADM6-60-01.5-L-4-2 (240 pins, 60 per row)
  - Mates with ADF6-60-01.5-L-4-2

5.2 x 7.6 cm UltraSoM+ carrier use four Samtec AcceleRate HD High-Density Slim Body Arrays on top side.

- 4x ADF6-60-03.5-L-4-2 (160-pins)
  - Mates with ADM6-60-01.5-L-4-2

9.1 Features

- Board-to-Board Connector 240-pins, 60 contacts per row
- 0.025" (0.635 mm) pitch
- Data Rate: max 56 Gbps
- Mates with: ADM6/APF6
- Insulator Material: LCP, Black
- Contact Material: Copper Alloy
- Plating: Au or Sn over 50 µ" (1.27 µm) N
- Operating Temperature Range: -55 °C to +125 °C
- PCIe 5.0 capable: Yes
- Lead-Free Solderable: Yes
- RoHS Compliant: Yes

9.2 Connector Stacking height

When using the standard type on baseboard and module, the mating height is 5 mm.

Other mating heights are possible by using connectors with a different height:

Order number	REF number	Samtec Number	Type	Contribution to stacking height	Comment
30095	REF-30095	ADM6-60-01.5-L-4-2	Module connector	1.5 mm	Standard connector used on modules
31137	REF-31137	ADF6-60-03.5-L-4-2	Baseboard connector	3.5 mm	Standard connector used on carrier

Table 8: Connectors.

9.3 Connector Speed Ratings

The AcceleRate HD High-Density connector speed rating depends on the stacking height; please see the following table:

Stacking height	Speed rating
5 mm	56 Gbps

Table 9: Speed rating.

9.4 Current Rating

Current rating of Samtec AcceleRate HD High-Density B2B connectors is 1.34 A per pin (4 pins powered)

9.5 Connector Mechanical Ratings

- Shock: 100G, 6 ms Sine
- Vibration: 7.5G random, 2 hours per axis, 3 axes total

10 Technical Specifications

10.1 Absolute Maximum Ratings *)

Power Rail Name/ Schematic Name	Description	Min	Max	Unit
LP_DCDC	Micromodule Power	-0.300	6.0	V
DCDCIN	Micromodule Power	-0.300	7.0	V
GT_DCDC	Micromodule Power	-0.300	6.0	V
PL_DCIN 1)	Micromodule Power	-0.300	4.0	V
3.3VIN	Micromodule Power	-0.300	3.600	V
PLL_3V3	PLL power supply	-0.500	3.8	V
PS_BATT	RTC / BBRAM	-0.500	2.000	V
VCCO_47	HD IO Bank power supply	-0.500	2.000	V
VCCO_48	HD IO Bank power supply	-0.500	2.000	V
VCCO_64	HP IO Bank power supply	-0.500	3.400	V
VCCO_65	HP IO Bank power supply	-0.500	3.400	V
VCCO_66	HP IO Bank power supply	-0.500	3.400	V
VREF_64	Bank input reference voltage	-0.500	2.000	V
VREF_65	Bank input reference voltage	-0.500	2.000	V
VREF_66	Bank input reference voltage	-0.500	2.000	V

Table 10: PS absolute maximum ratings

[1)] This value depends highly on DCDC U4. Higher values are possible with different DCDCs. For more information consult schematic and according datasheets.

[*)] Stresses beyond those listed under Absolute Maximum Ratings(see page 0) may cause permanent damage to the device. These are stress ratings only, which do not imply functional operation of the device at these or any other conditions beyond those indicated under Recommended Operating Condition(see page 0). Exposure to absolute-maximum rated conditions for extended periods may affect device reliability.

10.2 Recommended Operating Conditions

This TRM is generic for all variants. Temperature range can be different depending on assembly version. Voltage range is mostly the same during variants (exceptions are possible, depending on custom request)

Operating temperature range depends also on customer design and cooling solution. Please contact us for options.

- Variants of modules are described here: Article Number Information[1]
- Modules with commercial temperature grade are equipped with components that cover at least the range of 0°C to 75°C
- Modules with extended temperature grade are equipped with components that cover at least the range of 0°C to 85°C
- Modules with industrial temperature grade are equipped with components that cover at least the range of -40°C to 85°C
- The actual operating temperature range will depend on the FPGA / SoC design / usage and cooling and other variables.

Parameter	Min	Max	Units	Reference Document
LP_DCDC [1)]	3.135	3.465	V	
DCDCIN [1)]	3.135	3.465	V	
GT_DCDC [1)]	3.135	3.465	V	
PL_DCIN [1) 2)]	3.135	3.465	V	
3.3VIN	3.135	3.465	V	
PLL_3V3	3.135	3.465	V	
PS_BATT	1.2	1.5	V	See FPGA datasheet.
VCCO_47	1.164	3.399	V	See FPGA datasheet.

1 https://wiki.trenz-electronic.de/display/PD/Article+Number+Information

Parameter	Min	Max	Units	Reference Document
VCCO_48	1.164	3.399	V	See FPGA datasheet.
VCCO_64	0.97	1.854	V	See FPGA datasheet.
VCCO_65	0.97	1.854	V	See FPGA datasheet.
VCCO_66	0.97	1.854	V	See FPGA datasheet.
VREF_64	0.6	1.2	V	See FPGA datasheet.
VREF_65	0.6	1.2	V	See FPGA datasheet.
VREF_66	0.6	1.2	V	See FPGA datasheet.

Table 11: Recommended operating conditions.

1) Dependent on the assembly option a higher input voltage may be possible.

2) This value depends highly on DCDC U4. Higher values may possible with different DCDCs. For more information consult schematic and according datasheets.

10.3 Physical Dimensions

- Module size: 76 mm × 52 mm. Please download the assembly diagram for exact numbers.
- Mating height with standard connectors: 5 mm.

PCB thickness: 1.74 mm (± 10 %) (???).

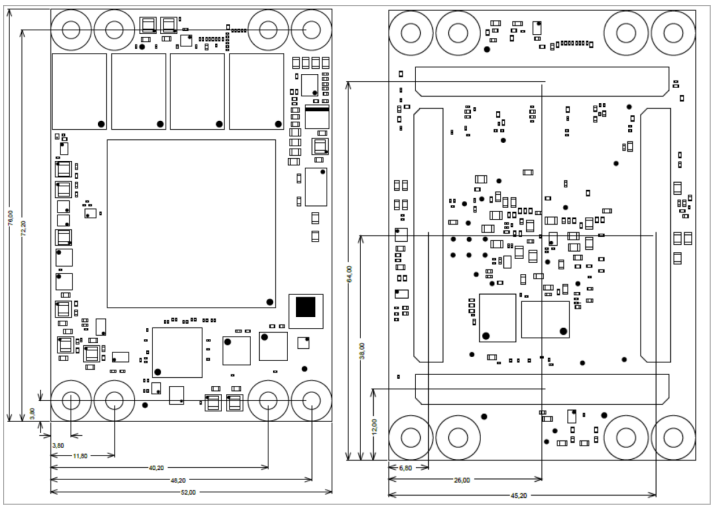

Figure 3: Physical Dimension

11 Currently Offered Variants

Trenz shop TE0817 overview page	
English page[2]	German page[3]

Table 12: Trenz Electronic Shop Overview

2 https://shop.trenz-electronic.de/en/search?sSearch=TE0817
3 https://shop.trenz-electronic.de/de/search?sSearch=TE0817

12 Revision History

12.1 Hardware Revision History

Figure 4: Board hardware revision number.

Date	Revision	Changes	Documentation Link
-	REV01	First Production Release	REV01[4]

Table 13: Hardware Revision History
Hardware revision number can be found on the PCB board together with the module model number separated by the dash.

12.2 Document Change History

Date	Revision	Contributor	Description
2022-11-08	v.13(see page 5)	ED[5]	• Initial Document
--	all	ED[6] , John Hartfiel[7]	• --

Table 14: Document change history.

4 https://shop.trenz-electronic.de/de/Download/?path=Trenz_Electronic/Modules_and_Module_Carriers/5.2x7.6/TE0817/REV01/Documents
5 https://wiki.trenz-electronic.de/display/~e.dyck
6 https://wiki.trenz-electronic.de/display/~e.dyck
7 https://wiki.trenz-electronic.de/display/~j.hartfiel

13 Disclaimer

13.1 Data Privacy

Please also note our data protection declaration at https://www.trenz-electronic.de/en/Data-protection-Privacy

13.2 Document Warranty

The material contained in this document is provided “as is” and is subject to being changed at any time without notice. Trenz Electronic does not warrant the accuracy and completeness of the materials in this document. Further, to the maximum extent permitted by applicable law, Trenz Electronic disclaims all warranties, either express or implied, with regard to this document and any information contained herein, including but not limited to the implied warranties of merchantability, fitness for a particular purpose or non infringement of intellectual property. Trenz Electronic shall not be liable for errors or for incidental or consequential damages in connection with the furnishing, use, or performance of this document or of any information contained herein.

13.3 Limitation of Liability

In no event will Trenz Electronic, its suppliers, or other third parties mentioned in this document be liable for any damages whatsoever (including, without limitation, those resulting from lost profits, lost data or business interruption) arising out of the use, inability to use, or the results of use of this document, any documents linked to this document, or the materials or information contained at any or all such documents. If your use of the materials or information from this document results in the need for servicing, repair or correction of equipment or data, you assume all costs thereof.

13.4 Copyright Notice

No part of this manual may be reproduced in any form or by any means (including electronic storage and retrieval or translation into a foreign language) without prior agreement and written consent from Trenz Electronic.

13.5 Technology Licenses

The hardware / firmware / software described in this document are furnished under a license and may be used / modified / copied only in accordance with the terms of such license.

13.6 Environmental Protection

To confront directly with the responsibility toward the environment, the global community and eventually also oneself. Such a resolution should be integral part not only of everybody's life. Also enterprises shall be conscious of their social responsibility and contribute to the preservation of our common living space. That is why Trenz Electronic invests in the protection of our Environment.

13.7 REACH, RoHS and WEEE

REACH

Trenz Electronic is a manufacturer and a distributor of electronic products. It is therefore a so called downstream user in the sense of REACH[8]. The products we supply to you are solely non-chemical products (goods). Moreover and under normal and reasonably foreseeable circumstances of application, the goods supplied to you shall not release any substance. For that, Trenz Electronic is obliged to neither register nor to provide safety data sheet. According to present knowledge and to best of our knowledge, no SVHC (Substances of Very High Concern) on the Candidate List[9] are contained in our products. Furthermore, we will immediately and unsolicited inform our customers in compliance with REACH - Article 33 if any substance present in our goods (above a concentration of 0,1 % weight by weight) will be classified as SVHC by the European Chemicals Agency (ECHA)[10].

RoHS

Trenz Electronic GmbH herewith declares that all its products are developed, manufactured and distributed RoHS compliant.

WEEE

Information for users within the European Union in accordance with Directive 2002/96/EC of the European Parliament and of the Council of 27 January 2003 on waste electrical and electronic equipment (WEEE).

Users of electrical and electronic equipment in private households are required not to dispose of waste electrical and electronic equipment as unsorted municipal waste and to collect such waste electrical and electronic equipment separately. By the 13 August 2005, Member States shall have ensured that systems are set up allowing final holders and distributors to return waste electrical and electronic equipment at least free of charge. Member States shall ensure the availability and accessibility of the necessary collection facilities. Separate collection is the precondition to ensure specific treatment and recycling of waste electrical and electronic equipment and is necessary to achieve the chosen level of protection of human health and the environment in the European Union. Consumers have to actively contribute to the success of such collection and the return of waste electrical and electronic equipment. Presence of hazardous substances in electrical and electronic equipment results in potential effects on the environment and human health. The symbol consisting of the crossed-out wheeled bin indicates separate collection for waste electrical and electronic equipment.

Trenz Electronic is registered under WEEE-Reg.-Nr. DE97922676.

2019-06-07

8 http://guidance.echa.europa.eu/
9 https://echa.europa.eu/candidate-list-table
10 http://www.echa.europa.eu/