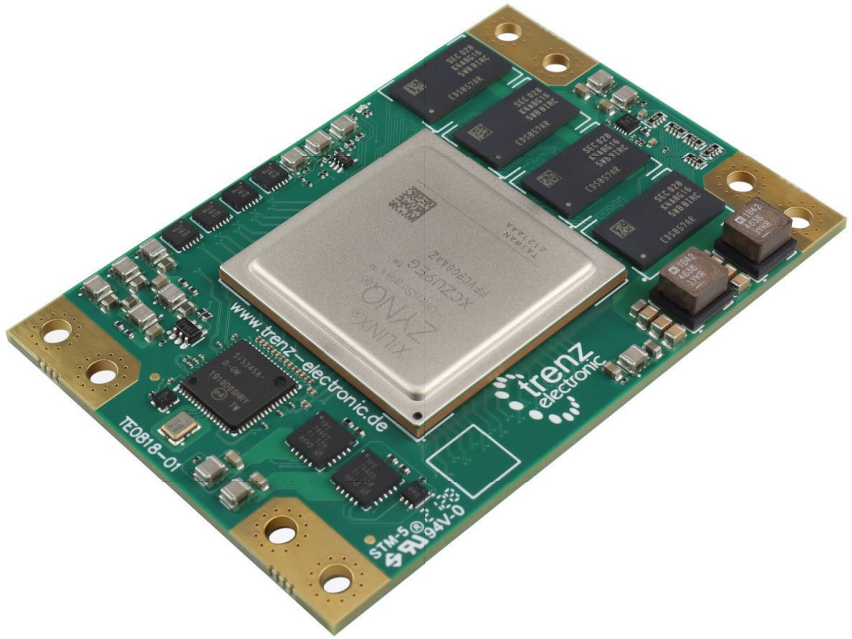

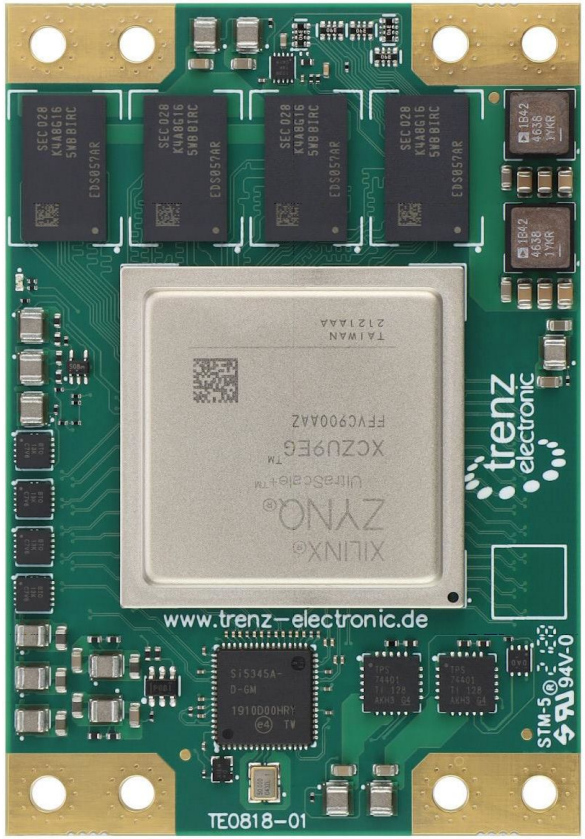

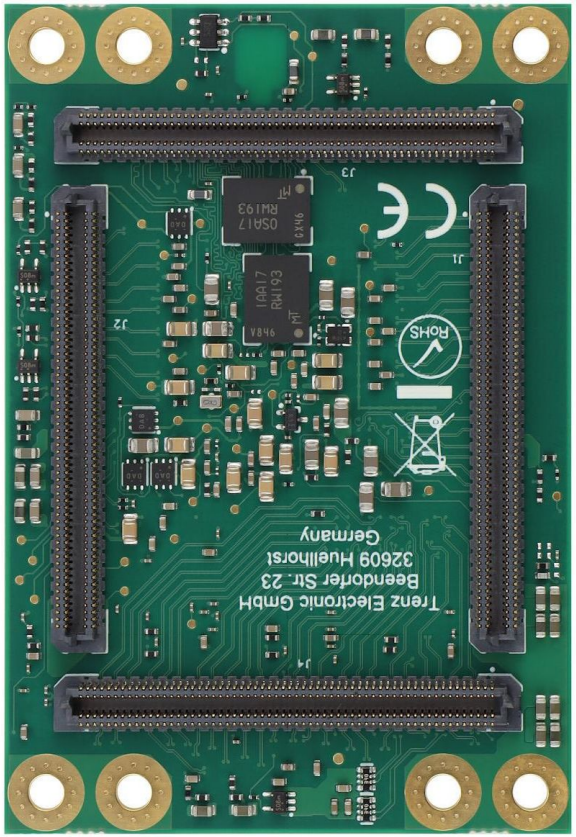

Regarding the usage of our schematics and alike documentation for Trenz module TE0818.

Project is protected under copyright and we strongly and strictly prohibit the reverse engineering or recreation, even if the design is just adapted or modified.

TE0818 is protected under such right and in case of plagiarism we will have to do anything necessary in order to protect our assets.

Schematics and other handouts serve for informational purposes only!

trenz electronic	Title: TE0818 - Legal Notices		
	A4	Number: TE0818 9GI81-A	Rev. 02
	Date: 19.09.2023	Copyright: Trenz Electronic GmbH	Page 1 of 31
	Filename: Legal Notices Modules.SchDoc		

REV	DATE	Description	
-01	2021-05	Initial revision	VT
-02	2023-10	1. Added capacitors C178, C187, C188, C189 (470nF) to VTT net. 2. Added U18 / U37 compensation network: R119, C190, C191. R118 is optional jumper and is installed when using the internal compensation network. External compensation network is used by default. 3. Connected all DDR4 TEN pins together and pulled them down with resistor R120 and added testpoint TP23. 4. Added testpoints TP25, TP27, TP29, TP35, TP37... TP79. 5. Changed capacitor C112 size from 0402 to 0201 and voltage rating from 16 V to 10 V. 6. Changed ferrid beads from MPZ0603S121HT000 to BLM15PX800SZ1D for L1, L2, L3, L4, L5, and L7. 7. Changed ferrid beads from MPZ1608S221A to BLM15PX800SZ1D for L6 and L8. 8. Added diode D2 between U41 pin 3 net MR and voltage rail 3.3VIN. 9. Modified trace length. 10. Updated documentation overviews.	VY/ED
-02a	2023-10-12	1. Changed inductors L1... L8 from BLM15PX800SZ1D to BLM15PX800SN1D.	ED

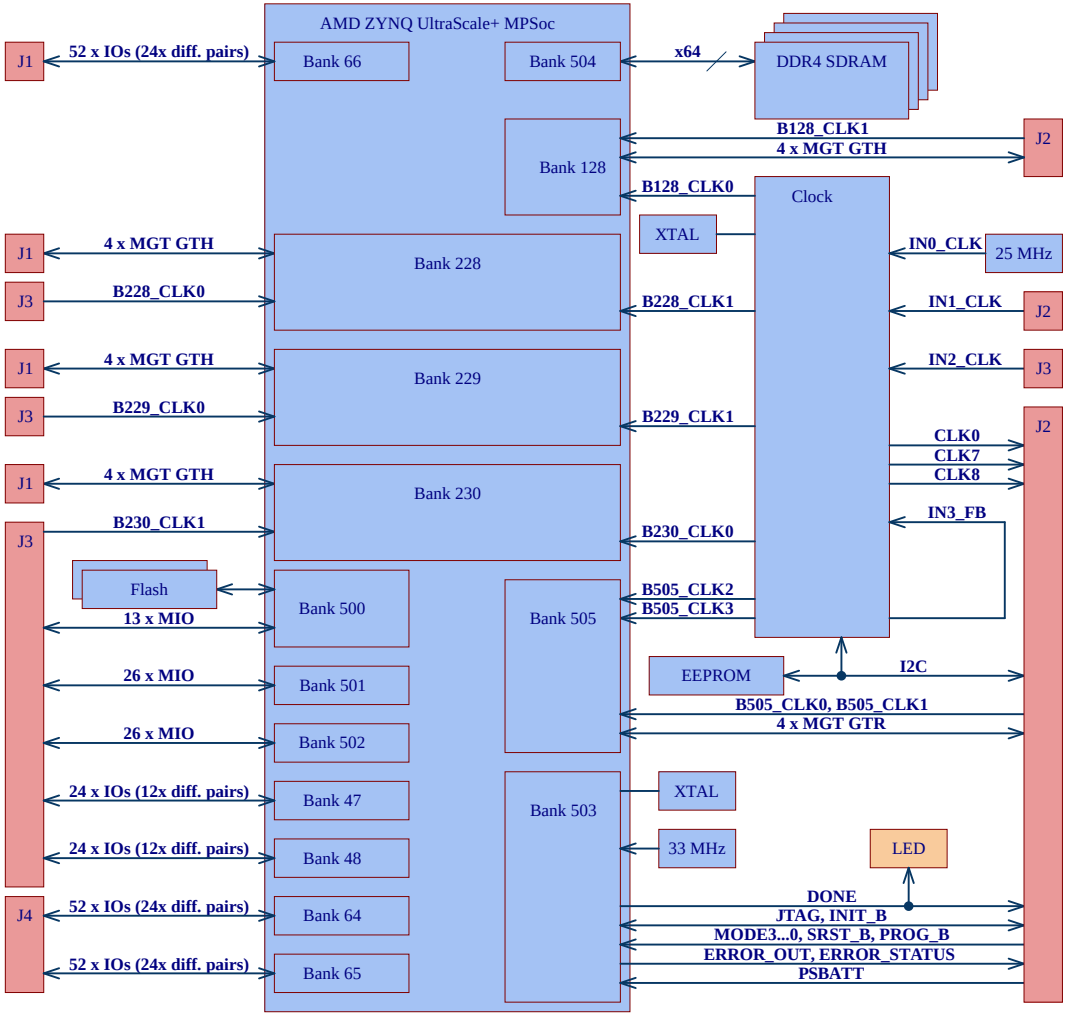

Supported Voltage Ranges:

Power Rail	Direction	Range	Tolerance	Description	Note
3.3VIN	IN	3.3V	+/- 5 %	Micromodule Power	Management voltage rail, supplied by power rail
PL_DCIN	IN	3.3V	+/- 5 %	Micromodule Power	Programmable Logic, supplied by power rail
LP_DCDC	IN	3.3V	+/- 3 %	Micromodule Power	Low-Power Domain, supplied by power rail
GT_DCDC	IN	3.3V	+/- 3 %	Micromodule Power	GTH Transceiver, supplied by power rail
DCDCIN	IN	3.3V	+/- 5 %	Micromodule Power	Full-Power Domain and GTR, supplied by power rail
VCCO_64	IN	1.0 V - 1.8 V	+/- 3 %	HP IO Bank 64	Supplied by external power rail via B2B connector
VCCO_65	IN	1.0 V - 1.8 V	+/- 3 %	HP IO Bank 65	Supplied by external power rail via B2B connector
VCCO_66	IN	1.0 V - 1.8 V	+/- 3 %	HP IO Bank 66	Supplied by external power rail via B2B connector
VCCO_47	IN	1.2 V - 3.3 V	+/- 3 %	HD IO Bank 47	Supplied by external power rail via B2B connector
VCCO_48	IN	1.2 V - 3.3 V	+/- 3 %	HD IO Bank 48	Supplied by external power rail via B2B connector
PSBATT	IN	1.2 V - 1.5 V	-	RTC / BBRAM	Supplied by external power rail via B2B connector
PLL_3V3	IN	3.3 V	+/- 3 %	Power for PLL	Supplied by external power rail via B2B connector
PL_1V8	OUT	1.8 V	+/- 3 %	Power for Carrier	Micromodule: Programmable Logic
PS_1V8	OUT	1.8 V	+/- 3 %	Power for Carrier	Micromodule: Processing System
DDR_1V2	OUT	1.2 V	+/- 3 %	Power for Carrier	Micromodule: PS DDR I/O Supply

I2C Address:

Device	I2C ADDR	Note
PLL U5	0x69	-
EEPROM U4	0x50	-

Legend:

- B2B Connector
- LED Interface
- On-board Components

TE0818	ZU_POWER	POWER	POWER_3
DDR4-TERM	ZU_PS_POWER	POWER_2	POWER_4

trenz electronic

Title: TE0818 - System Overview

A4 | Number: TE0818 9GI81-A | Rev. 02

Date: 18.09.2023 | Copyright: Trenz Electronic GmbH | Page 3 of 31

Filename: TE0818-Overview.SchDoc

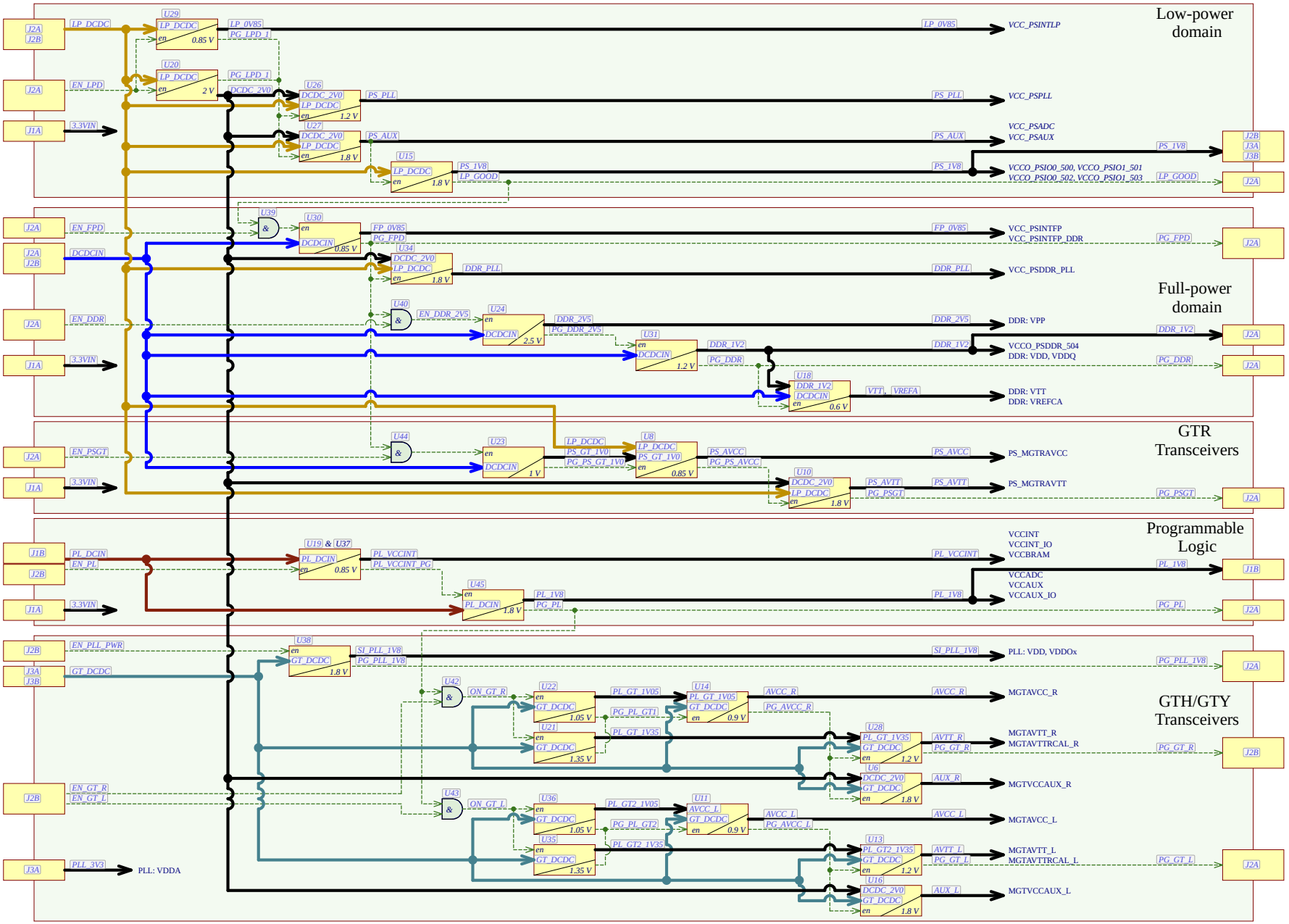

Power-on sequencing:

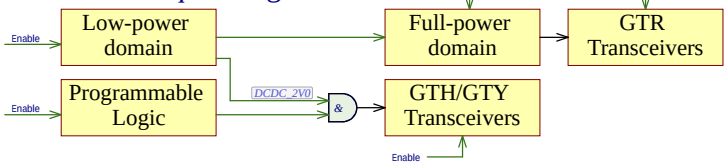

EN_GT_R — Net name
Power bus
Control signal
PL_DCIN 0.9V — Power converter
& — Logic AND gate

Title: TE0818 - Power Diagram		
A3	Nummer: TE0818 9GI81-A	Rev. 02
Datum: 19.09.2023	Copyright: Trenz Electronic GmbH	Page 4 of 31
Filename: Power_Diagram.SchDoc		

Special notes:

Serial
Serial
Serialnumber 6,3 x 6.3mm
LOGO1
TE Logo PRINT Layer
LOGO PRINT
MECH1
TE Address Overlay
LOGO ADDRESS
CE
CE Logo on Top Overlay
CE-TOPOVERLAY
RoHS
RoHS Logo on Top Overlay
RoHS-TOPOVERLAY
WEEE
WEEE Logo on Top Overlay
WEEE-TOPOVERLAY

PM3 PM6
FIDU-DOT - mini FIDU-DOT - mini
PM2 PM5
FIDU-DOT - mini FIDU-DOT - mini
PM1 PM4
FIDU-DOT - mini FIDU-DOT - mini

GND
Mount.Hole 3.2mm für Unterlegscheibe
GND
Mount.Hole 3.2mm für Unterlegscheibe
GND
Mount.Hole 3.2mm für Unterlegscheibe
GND
Mount.Hole 3.2mm für Unterlegscheibe
GND
Mount.Hole 3.2mm für Unterlegscheibe
GND
Mount.Hole 3.2mm für Unterlegscheibe
GND
Mount.Hole 3.2mm für Unterlegscheibe
GND
Mount.Hole 3.2mm für Unterlegscheibe

Design drawn by:	ED
Checked by:	VY
Assembly variant:	9GI81-A
Created by:	ED
Modified by:	ED
Modified at:	2023-09-20

trenz electronic

Title: TE0818

A4	Number: TE0818 9GI81-A	Rev. 02
Date: 26.09.2023	Copyright: Trenz Electronic GmbH	Page 5 of 31
Filename: TE0818.SchDoc		

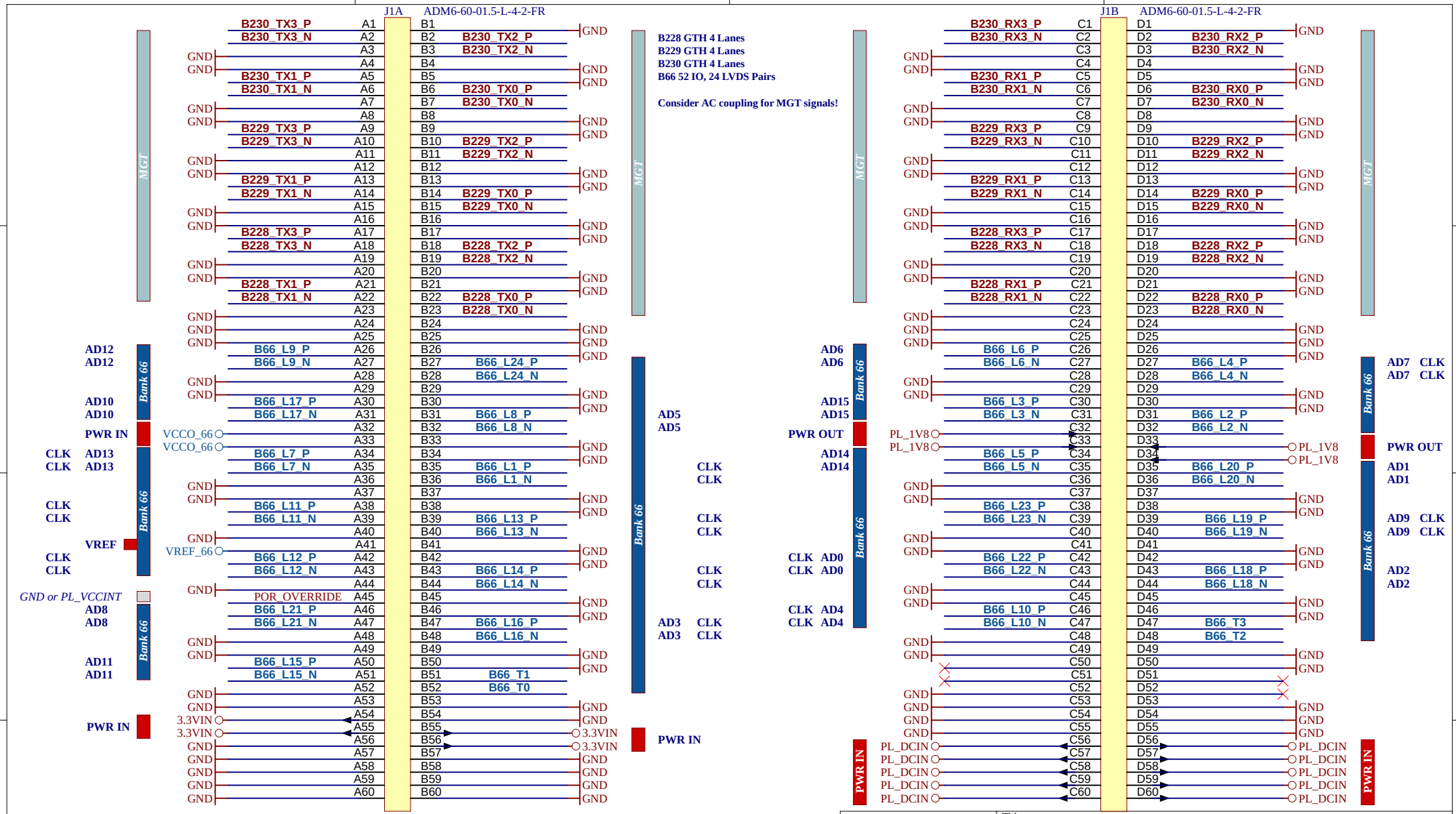
J1A ADM6-60-01.5-L-4-2-FR
J1B ADM6-60-01.5-L-4-2-FR
MGT
Bank 66
PWR IN
PWR OUT
VREF
B228 GTH 4 Lanes
B229 GTH 4 Lanes
B230 GTH 4 Lanes
B66 52 IO, 24 LVDS Pairs
Consider AC coupling for MGT signals!
B230_TX3_P A1
B230_TX3_N A2
B230_TX1_P A5
B230_TX1_N A6
B229_TX3_P A9
B229_TX3_N A10
B229_TX1_P A13
B229_TX1_N A14
B228_TX3_P A17
B228_TX3_N A18
B228_TX1_P A21
B228_TX1_N A22
B66_L9_P A26
B66_L9_N A27
B66_L17_P A30
B66_L17_N A31
VCCO_66
B66_L7_P A34
B66_L7_N A35
B66_L11_P A38
B66_L11_N A39
VREF_66
B66_L12_P A42
B66_L12_N A43
POR_OVERRIDE A45
B66_L21_P A46
B66_L21_N A47
B66_L15_P A50
B66_L15_N A51
3.3VIN
B2 B230_TX2_P
B3 B230_TX2_N
B6 B230_TX0_P
B7 B230_TX0_N
B10 B229_TX2_P
B11 B229_TX2_N
B14 B229_TX0_P
B15 B229_TX0_N
B17 B228_TX2_P
B18 B228_TX2_N
B21 B228_TX0_P
B22 B228_TX0_N
B27 B66_L24_P
B28 B66_L24_N
B31 B66_L8_P
B32 B66_L8_N
B35 B66_L1_P
B36 B66_L1_N
B39 B66_L13_P
B40 B66_L13_N
B43 B66_L14_P
B44 B66_L14_N
B47 B66_L16_P
B48 B66_L16_N
B51 B66_T1
B52 B66_T0
B55 3.3VIN
B56 3.3VIN
B57 PWR IN
B230_RX3_P C1
B230_RX3_N C2
B230_RX1_P C5
B230_RX1_N C6
B229_RX3_P C9
B229_RX3_N C10
B229_RX1_P C13
B229_RX1_N C14
B228_RX3_P C17
B228_RX3_N C18
B228_RX1_P C21
B228_RX1_N C22
B66_L6_P C26
B66_L6_N C27
B66_L3_P C30
B66_L3_N C31
PL_1V8
B66_L5_P C34
B66_L5_N C35
B66_L23_P C38
B66_L23_N C39
B66_L22_P C42
B66_L22_N C43
B66_L10_P C46
B66_L10_N C47
PL_DCIN
D2 B230_RX2_P
D3 B230_RX2_N
D6 B230_RX0_P
D7 B230_RX0_N
D10 B229_RX2_P
D11 B229_RX2_N
D14 B229_RX0_P
D15 B229_RX0_N
D18 B228_RX2_P
D19 B228_RX2_N
D22 B228_RX0_P
D23 B228_RX0_N
D27 B66_L4_P
D28 B66_L4_N
D31 B66_L2_P
D32 B66_L2_N
D35 B66_L20_P
D36 B66_L20_N
D39 B66_L19_P
D40 B66_L19_N
D43 B66_L18_P
D44 B66_L18_N
D47 B66_T3
D48 B66_T2
AD12 AD12
AD10 AD10
CLK AD13 CLK AD13
CLK CLK
CLK CLK
GND or PL_VCCINT
AD8 AD8
AD11 AD11
AD5 AD5
AD3 AD3
AD6 AD6
AD15 AD15
AD14 AD14
CLK AD0 CLK AD0
CLK AD4 CLK AD4
AD7 CLK AD7 CLK
AD1 AD1
AD9 CLK AD9 CLK
AD2 AD2
Bank 47 HD 0..VCCO47
Bank 48 HD 0..VCCO48
Bank 64 HP 0..VCCO64
Bank 65 HP 0..VCCO65
Bank 66 HP 0..VCCO66
GND TP8
PL_DCIN TP7 TP37
3.3VIN TP68
3.3VIN TP69
trenz electronic
Title: TE0818 - Connector J1
A4
Number: TE0818 9GI81-A
Rev. 02
Date: 26.09.2023
Copyright: Trenz Electronic GmbH
Page 6 of 31
Filename: J1.SchDoc

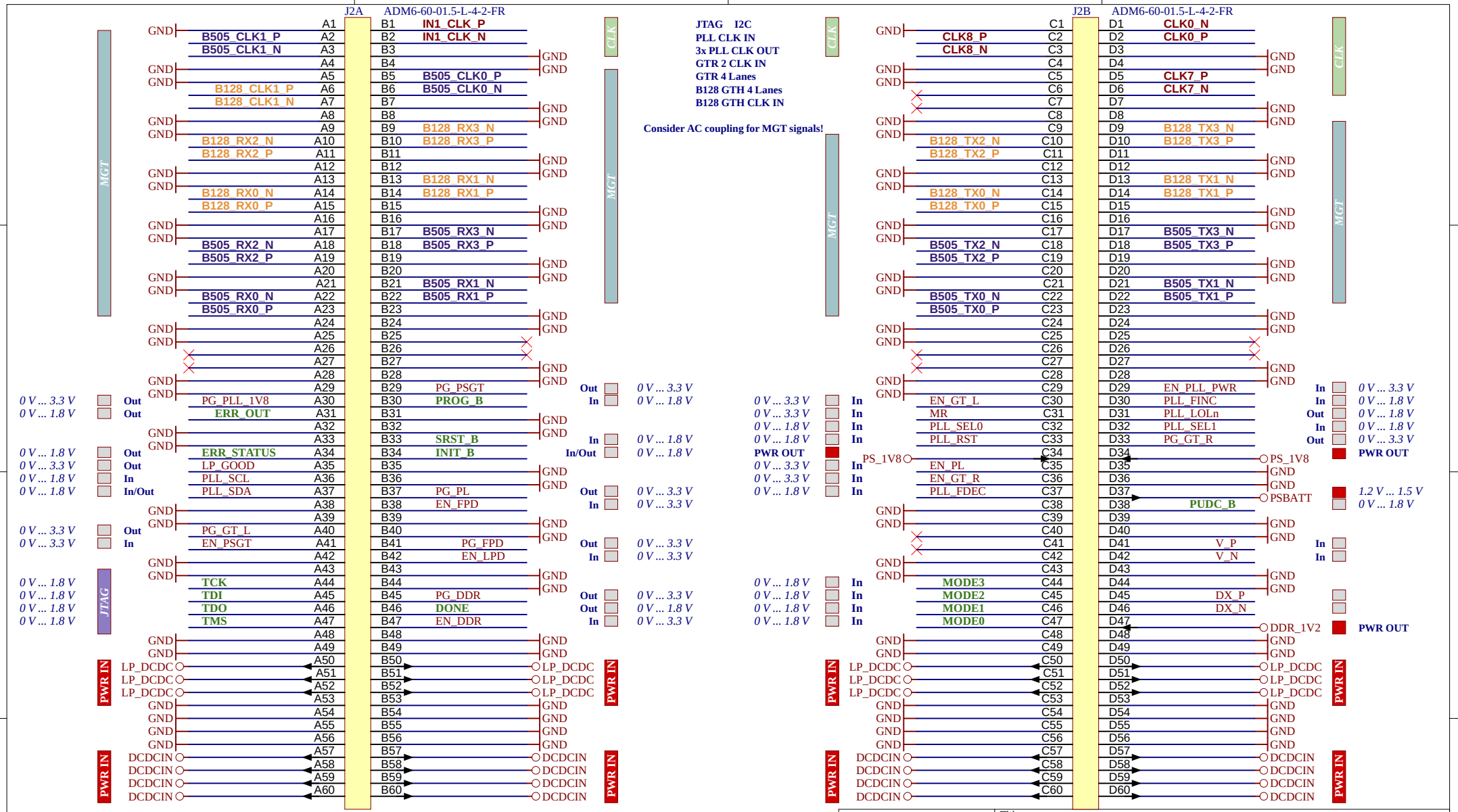
J2A ADM6-60-01.5-L-4-2-FR
J2B ADM6-60-01.5-L-4-2-FR
JTAG I2C
PLL CLK IN
3x PLL CLK OUT
GTR 2 CLK IN
GTR 4 Lanes
B128 GTH 4 Lanes
B128 GTH CLK IN
Consider AC coupling for MGT signals!
MGT
CLK
JTAG
PWR IN
B505_CLK1_P A2 B2 IN1_CLK_P
B505_CLK1_N A3 B3 IN1_CLK_N
B128_CLK1_P A6 B5 B505_CLK0_P
B128_CLK1_N A7 B6 B505_CLK0_N
B128_RX2_N A10 B9 B128_RX3_N
B128_RX2_P A11 B10 B128_RX3_P
B128_RX0_N A14 B13 B128_RX1_N
B128_RX0_P A15 B14 B128_RX1_P
B505_RX2_N A18 B17 B505_RX3_N
B505_RX2_P A19 B18 B505_RX3_P
B505_RX0_N A22 B21 B505_RX1_N
B505_RX0_P A23 B22 B505_RX1_P
PG_PLL_1V8 A30 B29 PG_PSGT
ERR_OUT A31 B30 PROG_B
ERR_STATUS A34 B33 SRST_B
LP_GOOD A35 B34 INIT_B
PLL_SCL A36
PLL_SDA A37
PG_GT_L A40 B37 PG_PL
EN_PSGT A41 B38 EN_FPD
B41 PG_FPD
B42 EN_LPD
TCK A44 B45 PG_DDR
TDI A45 B46 DONE
TDO A46 B47 EN_DDR
TMS A47
LP_DCDC A50 B50
DCDCIN A57 B57
CLK8_P C2 D2 CLK0_P
CLK8_N C3 D3
B128_TX2_N C10 D9 B128_TX3_N
B128_TX2_P C11 D10 B128_TX3_P
B128_TX0_N C14 D13 B128_TX1_N
B128_TX0_P C15 D14 B128_TX1_P
B505_TX2_N C18 D17 B505_TX3_N
B505_TX2_P C19 D18 B505_TX3_P
B505_TX0_N C22 D21 B505_TX1_N
B505_TX0_P C23 D22 B505_TX1_P
EN_GT_L C30 D29 EN_PLL_PWR
MR C31 D30 PLL_FINC
PLL_SEL0 C32 D31 PLL_LOLn
PLL_RST C33 D32 PLL_SEL1
PS_1V8 C34 D33 PG_GT_R
EN_PL C35 D34 PS_1V8
EN_GT_R C36 D36
PLL_FDEC C37 D37 PSBATT
PUDC_B D38
V_P D41
V_N D42
MODE3 C44 D44
MODE2 C45 D45 DX_P
MODE1 C46 D46 DX_N
MODE0 C47 D47 DDR_1V2
Bank 47 HD 0..VCCO47
Bank 48 HD 0..VCCO48
Bank 64 HP 0..VCCO64
Bank 65 HP 0..VCCO65
Bank 66 HP 0..VCCO66
DCDCIN TP4 TP35
LP_DCDC TP3 TP29
PS_1V8 TP14 TP39
TCK TDI TDO TMS
GND TP5 TP6 TP11 TP12 TP13
trenz electronic
Title: TE0818 - Connector J2
A4
Number: TE0818 9GI81-A
Rev. 02
Date: 26.09.2023
Copyright: Trenz Electronic GmbH
Page 7 of 31
Filename: J2.SchDoc

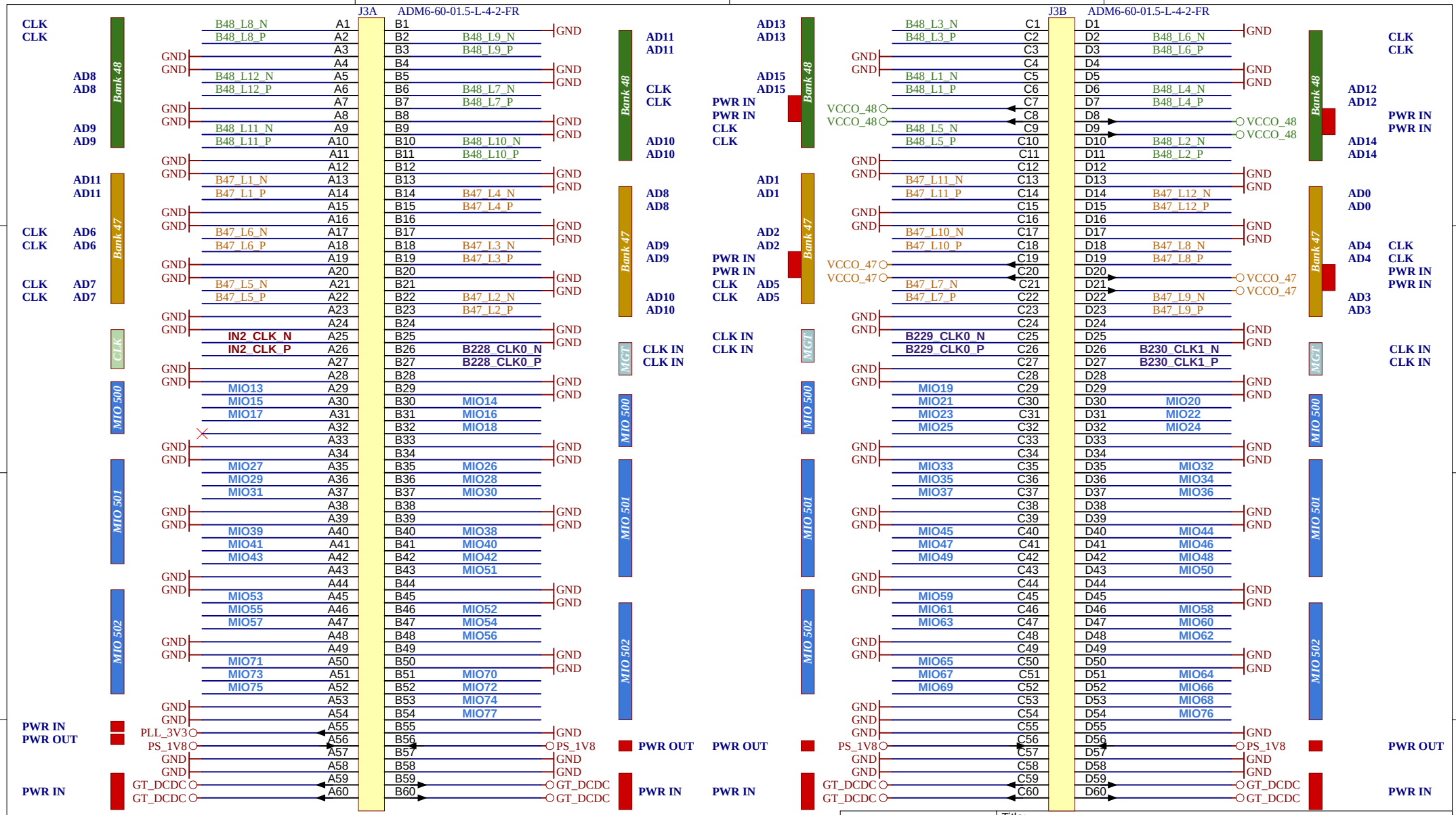
J3A ADM6-60-01.5-L-4-2-FR
J3B ADM6-60-01.5-L-4-2-FR
Bank 48
Bank 47
CLK
MGT
MIO 500
MIO 501
MIO 502
B48_L8_N A1
B48_L8_P A2
B48_L12_N A5
B48_L12_P A6
B48_L11_N A9
B48_L11_P A10
B47_L1_N A13
B47_L1_P A14
B47_L6_N A17
B47_L6_P A18
B47_L5_N A21
B47_L5_P A22
IN2_CLK_N A25
IN2_CLK_P A26
B2 B48_L9_N
B3 B48_L9_P
B6 B48_L7_N
B7 B48_L7_P
B10 B48_L10_N
B11 B48_L10_P
B14 B47_L4_N
B15 B47_L4_P
B18 B47_L3_N
B19 B47_L3_P
B22 B47_L2_N
B23 B47_L2_P
B26 B228_CLK0_N
B27 B228_CLK0_P
B48_L3_N C1
B48_L3_P C2
B48_L1_N C5
B48_L1_P C6
B48_L5_N C9
B48_L5_P C10
B47_L11_N C13
B47_L11_P C14
B47_L10_N C17
B47_L10_P C18
B47_L7_N C21
B47_L7_P C22
B229_CLK0_N C25
B229_CLK0_P C26
D2 B48_L6_N
D3 B48_L6_P
D6 B48_L4_N
D7 B48_L4_P
D10 B48_L2_N
D11 B48_L2_P
D14 B47_L12_N
D15 B47_L12_P
D18 B47_L8_N
D19 B47_L8_P
D22 B47_L9_N
D23 B47_L9_P
D26 B230_CLK1_N
D27 B230_CLK1_P
PLL_3V3 A55
PS_1V8 A56
GT_DCDC A59
GT_DCDC A60
VCCO_48
VCCO_47
Bank 47 HD 0..VCCO47
Bank 48 HD 0..VCCO48
Bank 64 HP 0..VCCO64
Bank 65 HP 0..VCCO65
Bank 66 HP 0..VCCO66
B47 24 IO, 12 LVDS Pairs
B48 24 IO, 12 LVDS Pairs
B228 GTH CLK IN
B229 GTH CLK IN
B230 GTH CLK IN
65 MIO
PLL CLK IN
GND
GT_DCDC
TP10
TP38
TP9
trenz electronic
Title: TE0818 - Connector J3
A4
Number: TE0818 9GI81-A
Rev. 02
Date: 26.09.2023
Copyright: Trenz Electronic GmbH
Page 8 of 31
Filename: J3.SchDoc

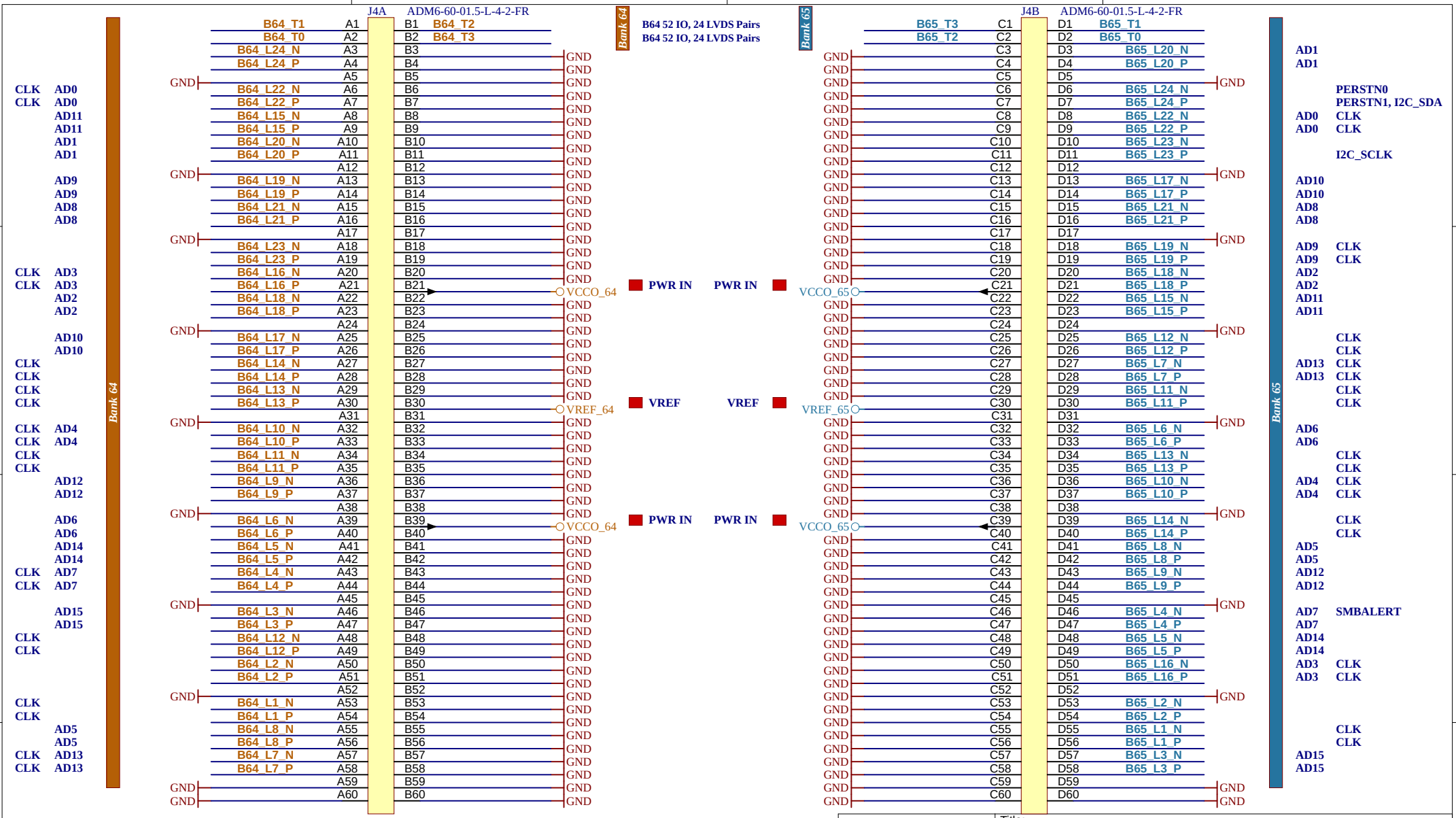
J4A ADM6-60-01.5-L-4-2-FR
J4B ADM6-60-01.5-L-4-2-FR
Bank 64
Bank 65
B64 52 IO, 24 LVDS Pairs
B64 52 IO, 24 LVDS Pairs
PWR IN
VREF
VCCO_64
VCCO_65
VREF_64
VREF_65
GND
B64_T1 A1 B1 B64_T2
B64_T0 A2 B2 B64_T3
B64_L24_N A3 B3
B64_L24_P A4 B4
A5 B5
B64_L22_N A6 B6
B64_L22_P A7 B7
B64_L15_N A8 B8
B64_L15_P A9 B9
B64_L20_N A10 B10
B64_L20_P A11 B11
A12 B12
B64_L19_N A13 B13
B64_L19_P A14 B14
B64_L21_N A15 B15
B64_L21_P A16 B16
A17 B17
B64_L23_N A18 B18
B64_L23_P A19 B19
B64_L16_N A20 B20
B64_L16_P A21 B21
B64_L18_N A22 B22
B64_L18_P A23 B23
A24 B24
B64_L17_N A25 B25
B64_L17_P A26 B26
B64_L14_N A27 B27
B64_L14_P A28 B28
B64_L13_N A29 B29
B64_L13_P A30 B30
A31 B31
B64_L10_N A32 B32
B64_L10_P A33 B33
B64_L11_N A34 B34
B64_L11_P A35 B35
B64_L9_N A36 B36
B64_L9_P A37 B37
A38 B38
B64_L6_N A39 B39
B64_L6_P A40 B40
B64_L5_N A41 B41
B64_L5_P A42 B42
B64_L4_N A43 B43
B64_L4_P A44 B44
A45 B45
B64_L3_N A46 B46
B64_L3_P A47 B47
B64_L12_N A48 B48
B64_L12_P A49 B49
B64_L2_N A50 B50
B64_L2_P A51 B51
A52 B52
B64_L1_N A53 B53
B64_L1_P A54 B54
B64_L8_N A55 B55
B64_L8_P A56 B56
B64_L7_N A57 B57
B64_L7_P A58 B58
A59 B59
A60 B60
B65_T3 C1 D1 B65_T1
B65_T2 C2 D2 B65_T0
C3 D3 B65_L20_N
C4 D4 B65_L20_P
C5 D5
C6 D6 B65_L24_N
C7 D7 B65_L24_P
C8 D8 B65_L22_N
C9 D9 B65_L22_P
C10 D10 B65_L23_N
C11 D11 B65_L23_P
C12 D12
C13 D13 B65_L17_N
C14 D14 B65_L17_P
C15 D15 B65_L21_N
C16 D16 B65_L21_P
C17 D17
C18 D18 B65_L19_N
C19 D19 B65_L19_P
C20 D20 B65_L18_N
C21 D21 B65_L18_P
C22 D22 B65_L15_N
C23 D23 B65_L15_P
C24 D24
C25 D25 B65_L12_N
C26 D26 B65_L12_P
C27 D27 B65_L7_N
C28 D28 B65_L7_P
C29 D29 B65_L11_N
C30 D30 B65_L11_P
C31 D31
C32 D32 B65_L6_N
C33 D33 B65_L6_P
C34 D34 B65_L13_N
C35 D35 B65_L13_P
C36 D36 B65_L10_N
C37 D37 B65_L10_P
C38 D38
C39 D39 B65_L14_N
C40 D40 B65_L14_P
C41 D41 B65_L8_N
C42 D42 B65_L8_P
C43 D43 B65_L9_N
C44 D44 B65_L9_P
C45 D45
C46 D46 B65_L4_N
C47 D47 B65_L4_P
C48 D48 B65_L5_N
C49 D49 B65_L5_P
C50 D50 B65_L16_N
C51 D51 B65_L16_P
C52 D52
C53 D53 B65_L2_N
C54 D54 B65_L2_P
C55 D55 B65_L1_N
C56 D56 B65_L1_P
C57 D57 B65_L3_N
C58 D58 B65_L3_P
C59 D59
C60 D60
CLK AD0
CLK AD0
AD11
AD11
AD1
AD1
AD9
AD9
AD8
AD8
CLK AD3
CLK AD3
AD2
AD2
AD10
AD10
CLK
CLK
CLK
CLK
CLK AD4
CLK AD4
CLK
CLK
AD12
AD12
AD6
AD6
AD14
AD14
CLK AD7
CLK AD7
AD15
AD15
CLK
CLK
CLK
CLK
AD5
AD5
CLK AD13
CLK AD13
AD1
AD1
PERSTN0
PERSTN1, I2C_SDA
AD0 CLK
AD0 CLK
I2C_SCLK
AD10
AD10
AD8
AD8
AD9 CLK
AD9 CLK
AD2
AD2
AD11
AD11
CLK
CLK
AD13 CLK
AD13 CLK
CLK
CLK
AD6
AD6
CLK
CLK
AD4 CLK
AD4 CLK
CLK
CLK
AD5
AD5
AD12
AD12
AD7 SMBALERT
AD7
AD14
AD14
AD3 CLK
AD3 CLK
CLK
CLK
AD15
AD15
Bank 47 HD 0..VCCO47
Bank 48 HD 0..VCCO48
Bank 64 HP 0..VCCO64
Bank 65 HP 0..VCCO65
Bank 66 HP 0..VCCO66
trenz electronic
Title: TE0818 - Connector J4
A4
Number: TE0818 9GI81-A
Rev. 02
Date: 26.09.2023
Copyright: Trenz Electronic GmbH
Page 9 of 31
Filename: J4.SchDoc

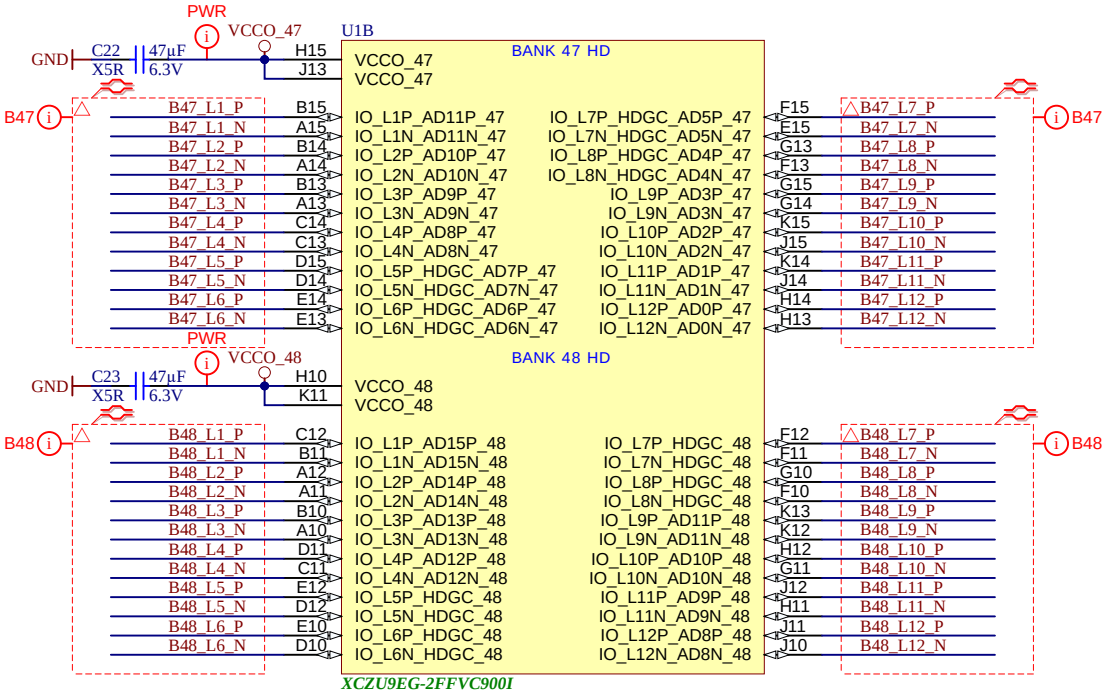

trenz electronic	Title: TE0818 - HD Bank		
A4	Number: TE0818 9GI81-A		Rev. 02
Date: 26.09.2023	Copyright: Trenz Electronic GmbH		Page 10 of 31
Filename: B_HD.SchDoc			

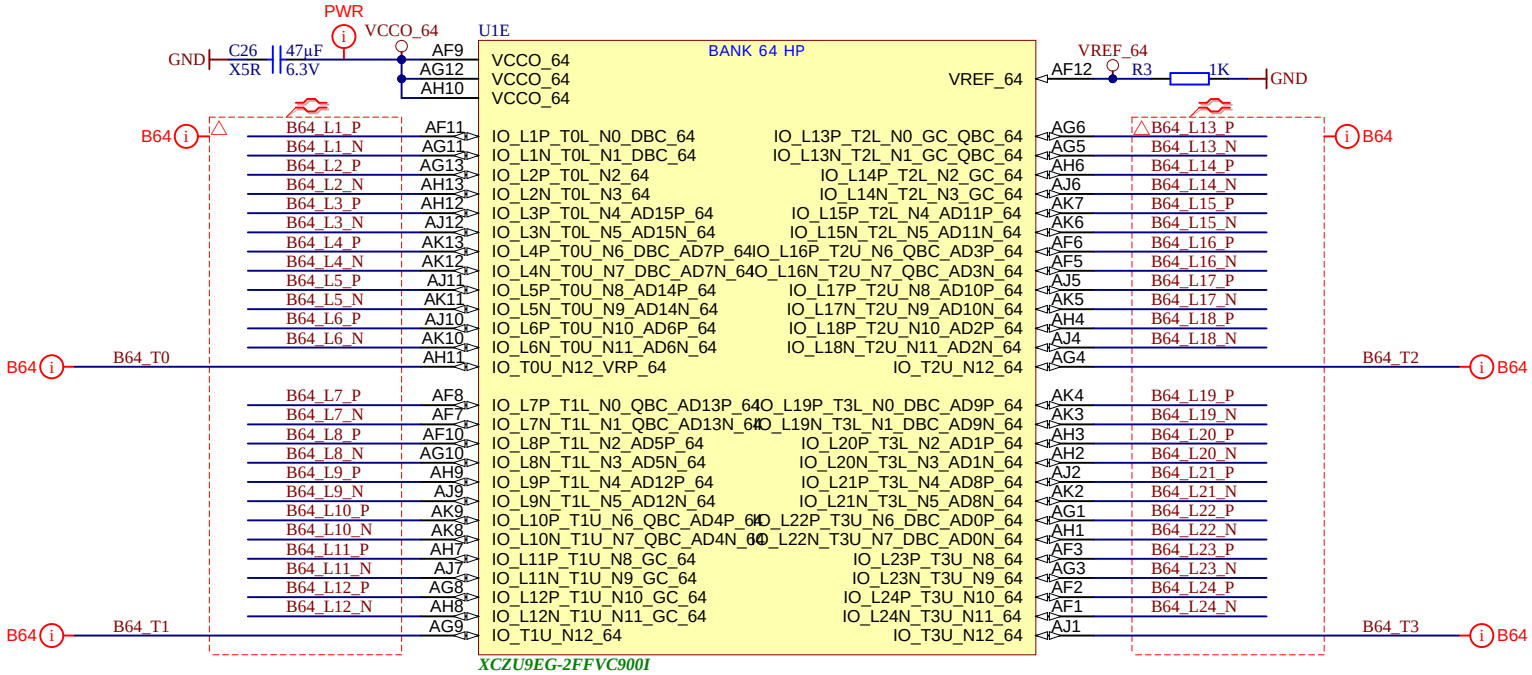

trenz electronic	Title: TE0818 - HP Bank 1		
A4	Number: TE0818 9GI81-A		Rev. 02
Date: 26.09.2023	Copyright: Trenz Electronic GmbH		Page 11 of 31
Filename: B64.SchDoc			

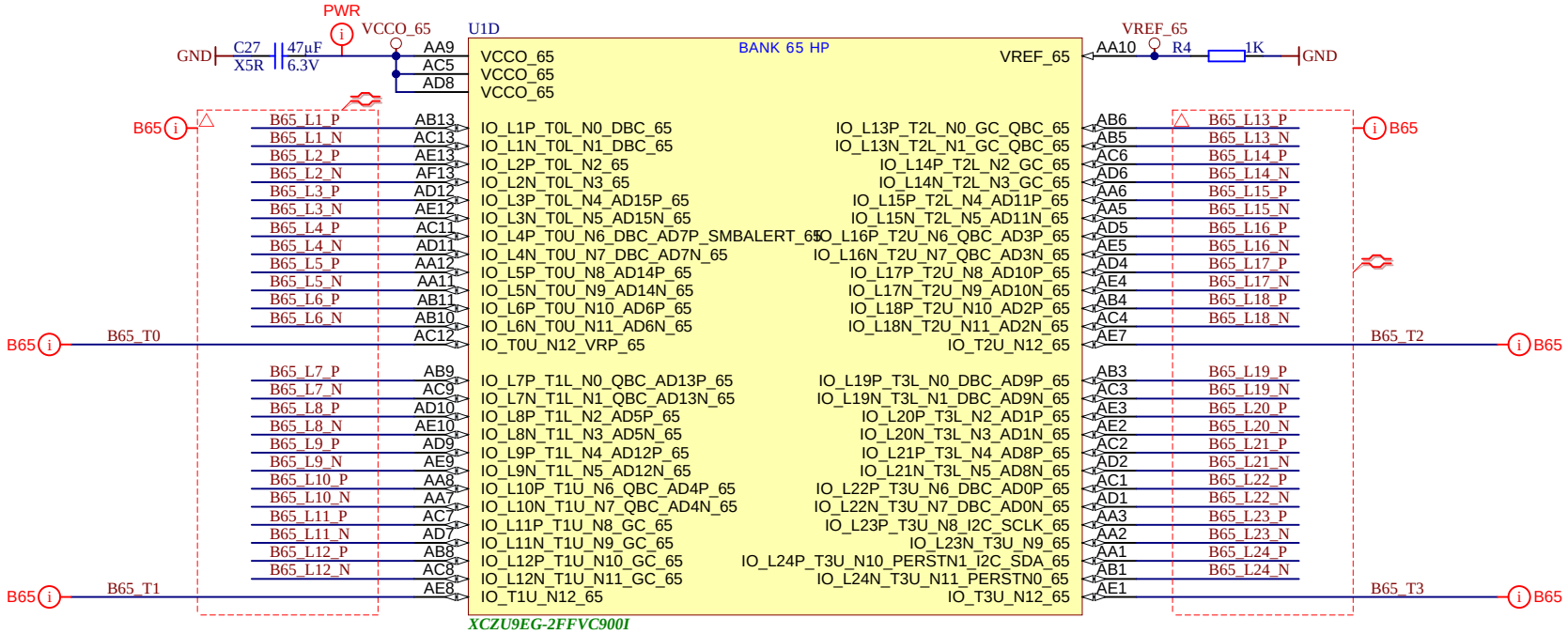

trenz electronic	Title: TE0818 - HP Bank 2		
A4	Number: TE0818 9GI81-A		Rev. 02
Date: 26.09.2023	Copyright: Trenz Electronic GmbH		Page 12 of 31
Filename: B65.SchDoc			

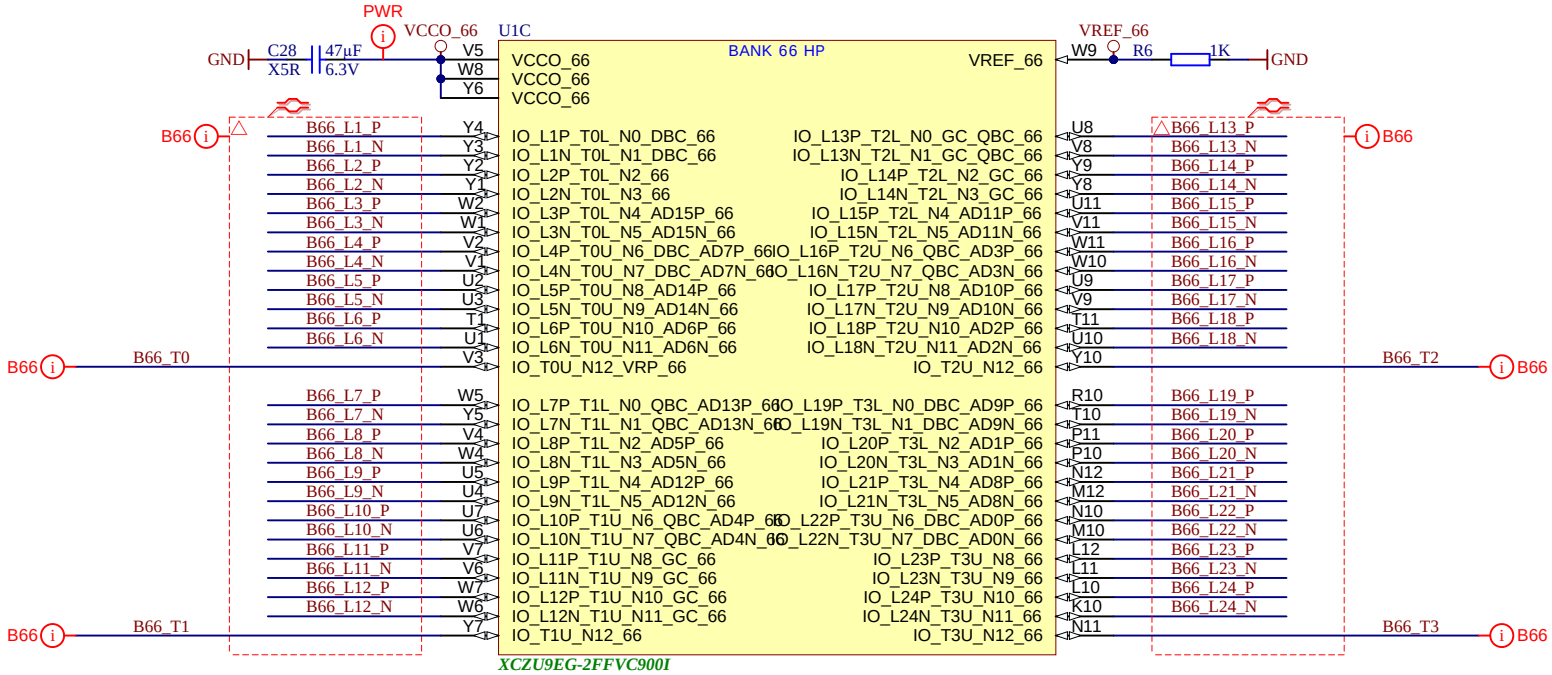

trenz electronic	Title: TE0818 - HP Bank 3		
A4	Number: TE0818 9GI81-A		Rev. 02
Date: 26.09.2023	Copyright: Trenz Electronic GmbH		Page 13 of 31
Filename: B66.SchDoc			

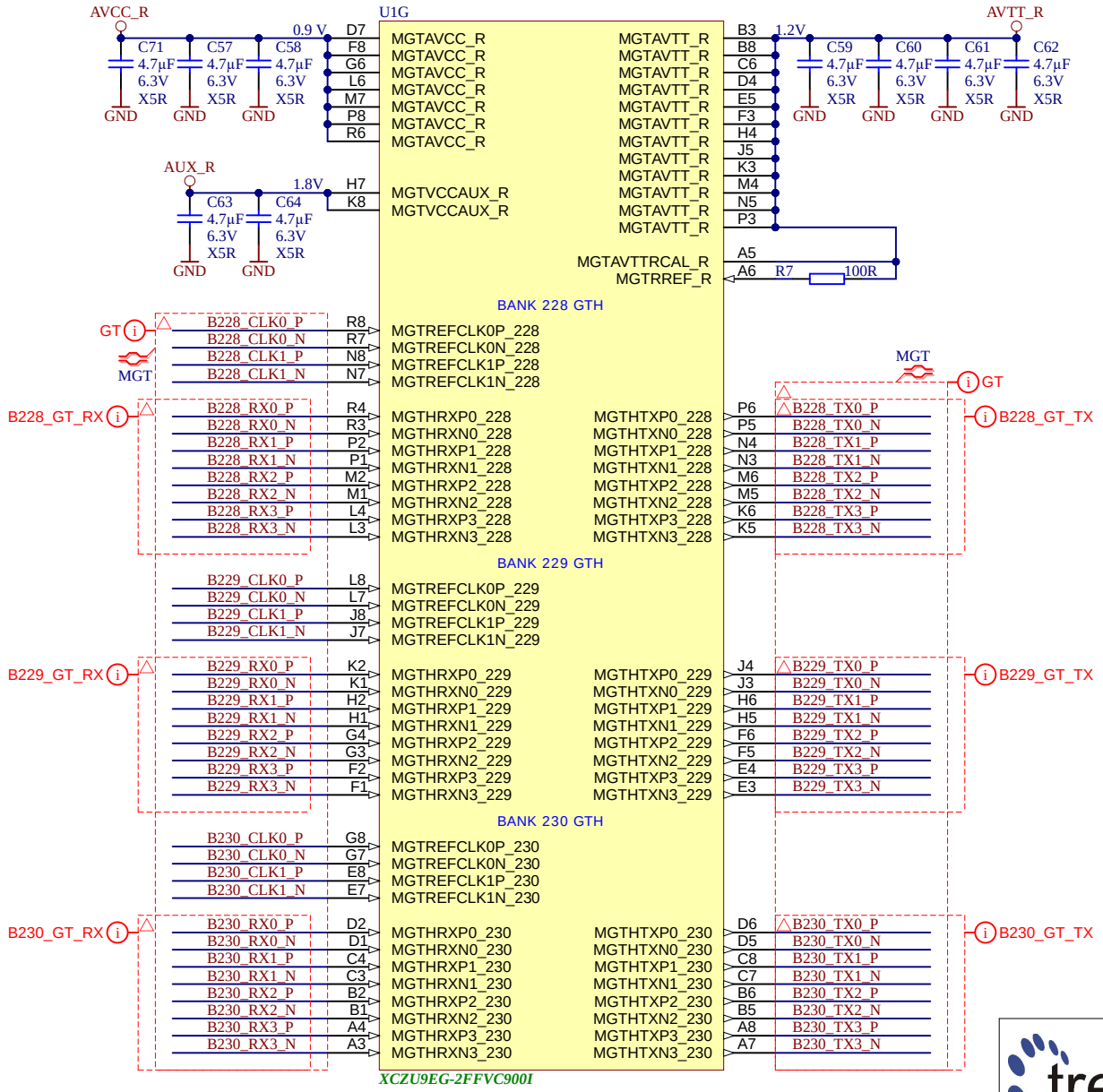

trenz electronic	Title: TE0818 - GTH Bank 1		
A4	Number: TE0818 9GI81-A		Rev. 02
Date: 26.09.2023	Copyright: Trenz Electronic GmbH		Page 14 of 31
Filename: B_GT.SchDoc			

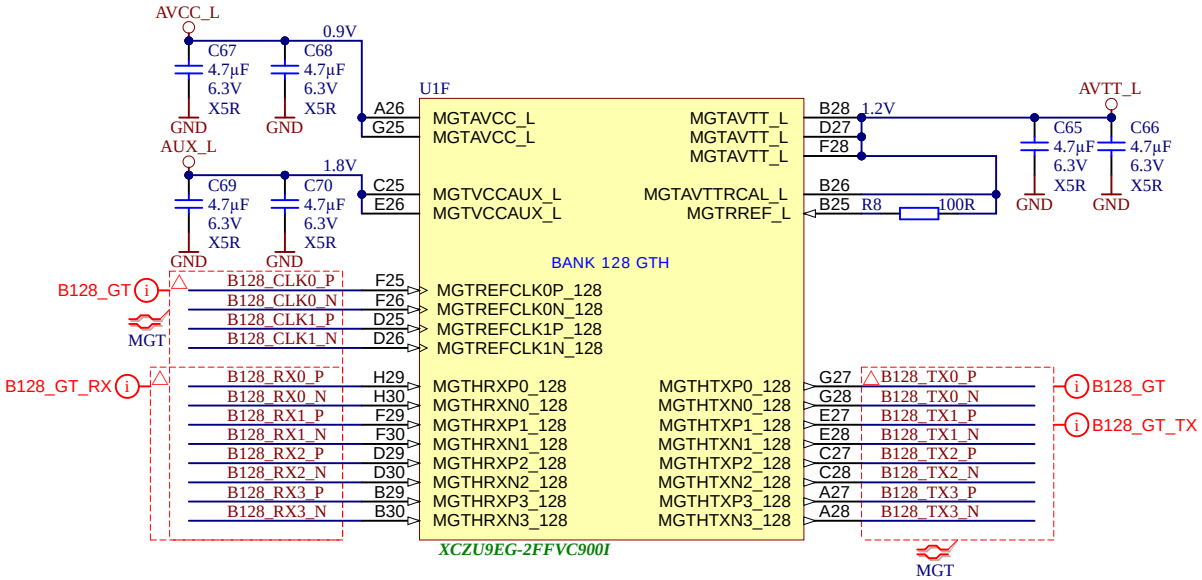

trenz electronic	Title: TE0818 - GTH Bank 2		
A4	Number: TE0818 9GI81-A		Rev. 02
Date: 26.09.2023	Copyright: Trenz Electronic GmbH		Page 15 of 31
Filename: B_GT_2.SchDoc			

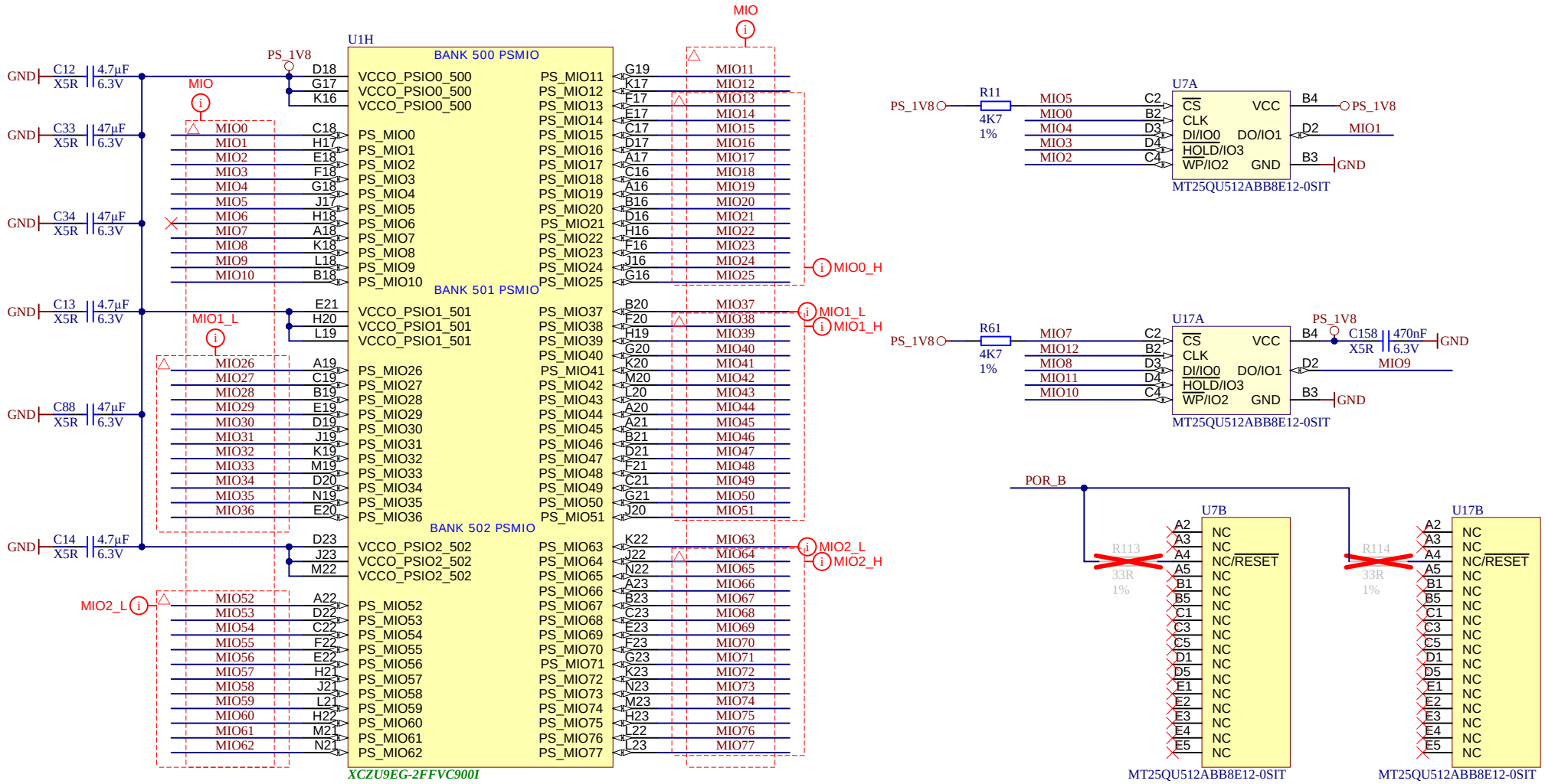

trenz electronic	Title: TE0818 - MIO Banks		
A4	Number: TE0818 9GI81-A		Rev. 02
Date: 26.09.2023	Copyright: Trenz Electronic GmbH		Page 16 of 31
Filename: B_MIO.SchDoc			

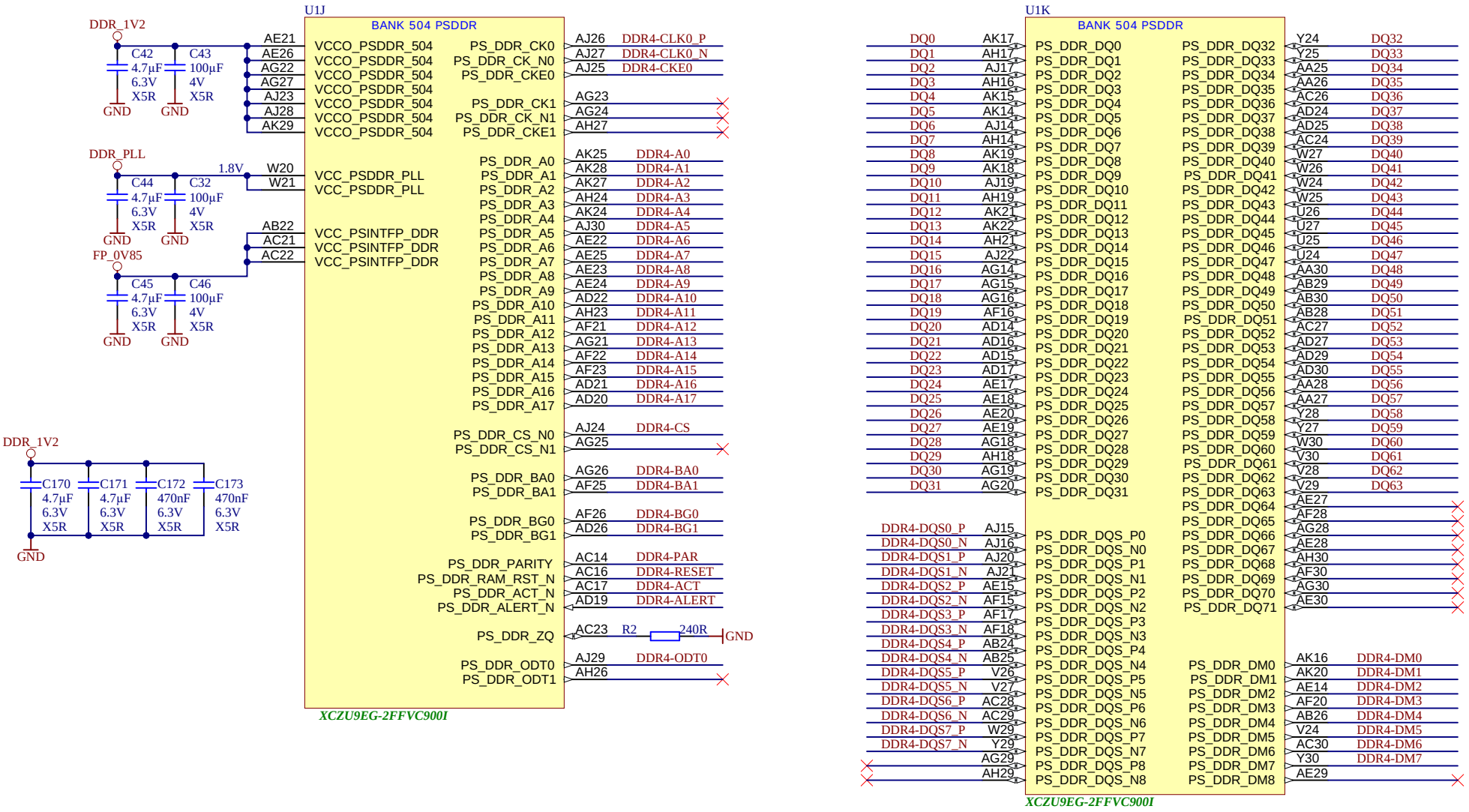

trenz electronic

Title: TE0818 - PS DDR			
A4	Number: TE0818 9GI81-A		Rev. 02
Date: 26.09.2023	Copyright: Trenz Electronic GmbH		Page 17 of 31
Filename: PS_DDR.SchDoc			

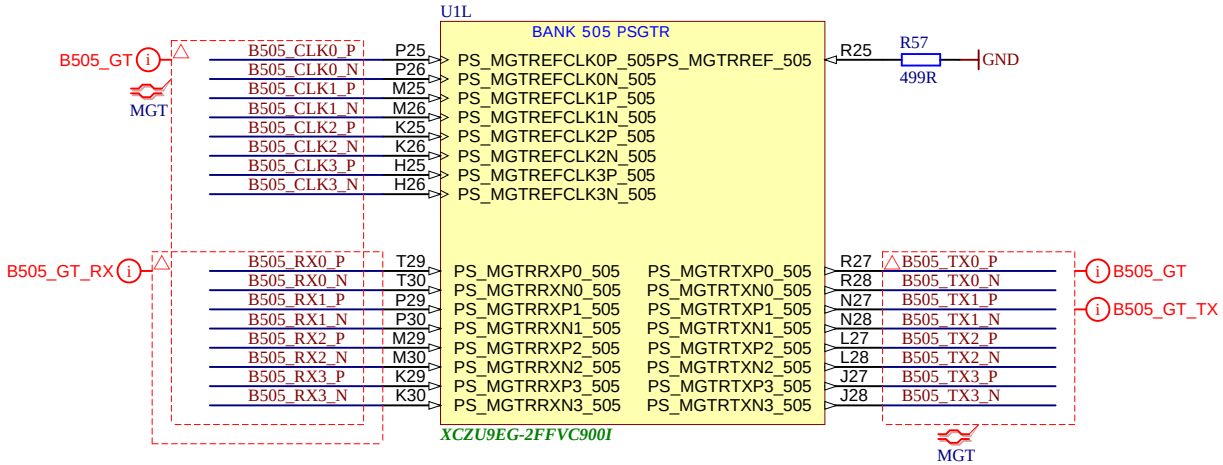

trenz electronic	Title: TE0818 - PS GT		
A4	Number: TE0818 9GI81-A		Rev. 02
Date: 26.09.2023	Copyright: Trenz Electronic GmbH		Page 18 of 31
Filename: B_PS_GT.SchDoc			

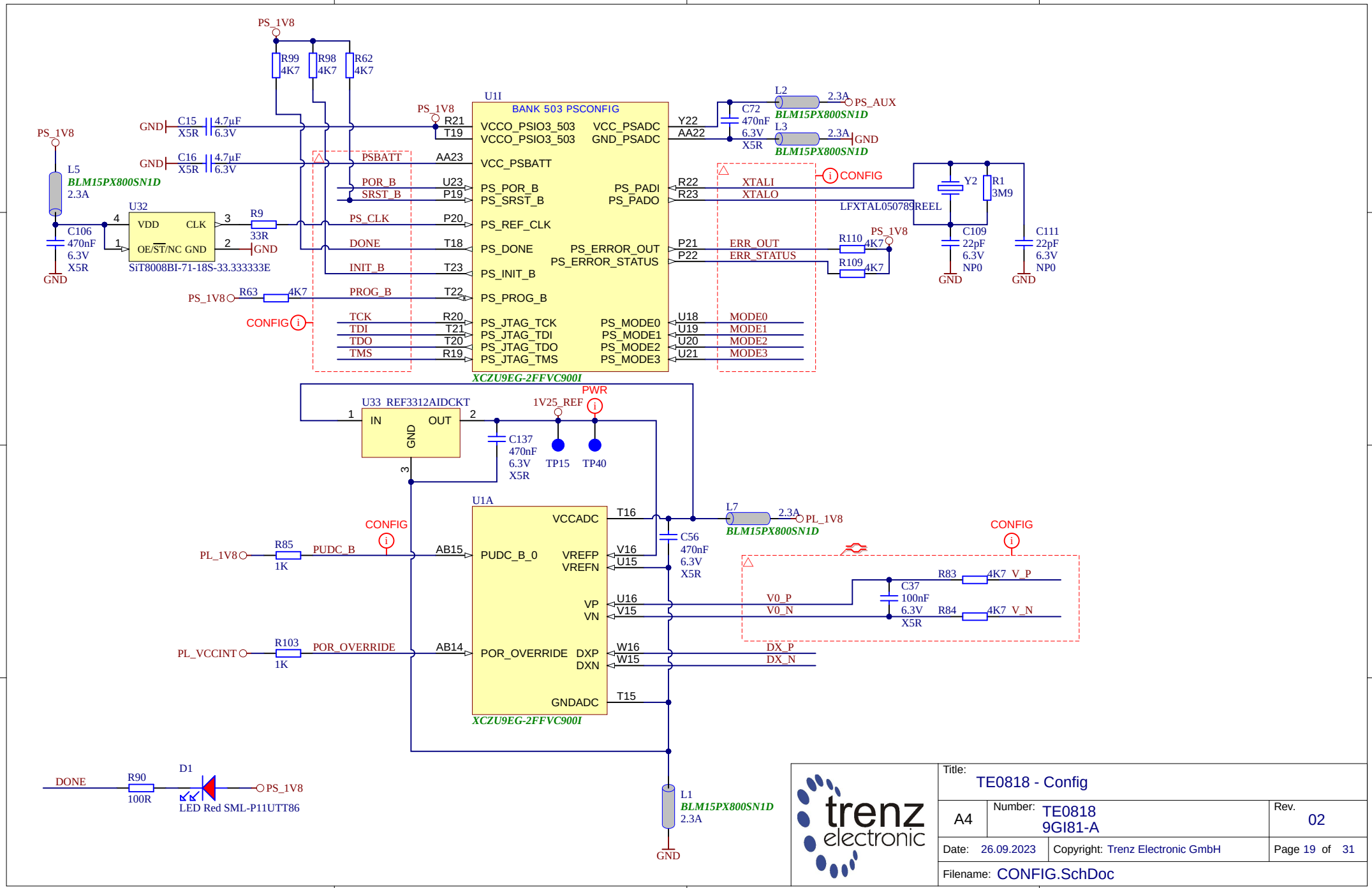

trenz electronic	Title: TE0818 - Config		
A4	Number: TE0818 9GI81-A		Rev. 02
Date: 26.09.2023	Copyright: Trenz Electronic GmbH		Page 19 of 31
Filename: CONFIG.SchDoc			

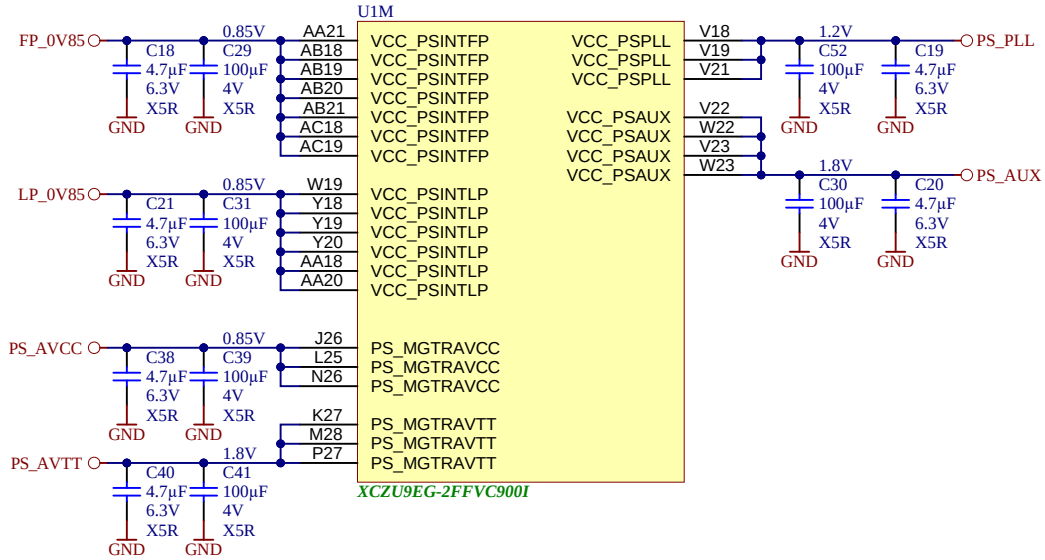

trenz electronic	Title: TE0818 - PS Power		
A4	Number: TE0818 9GI81-A		Rev. 02
Date: 26.09.2023	Copyright: Trenz Electronic GmbH		Page 20 of 31
Filename: ZU_PS_POWER.SchDoc			

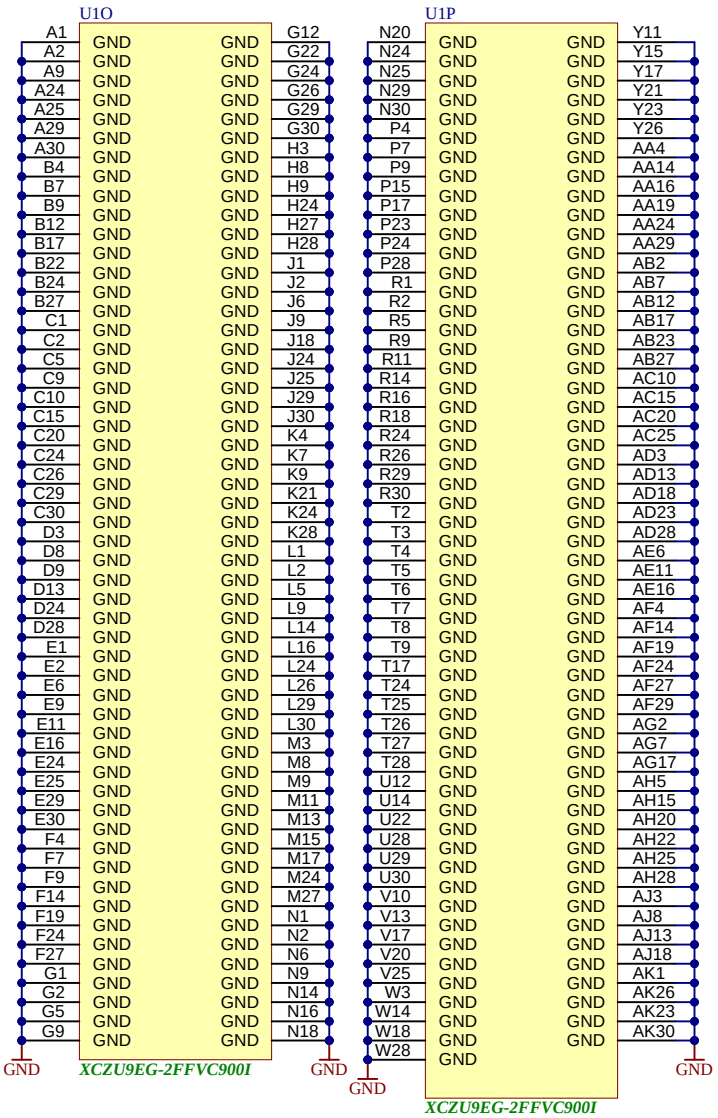

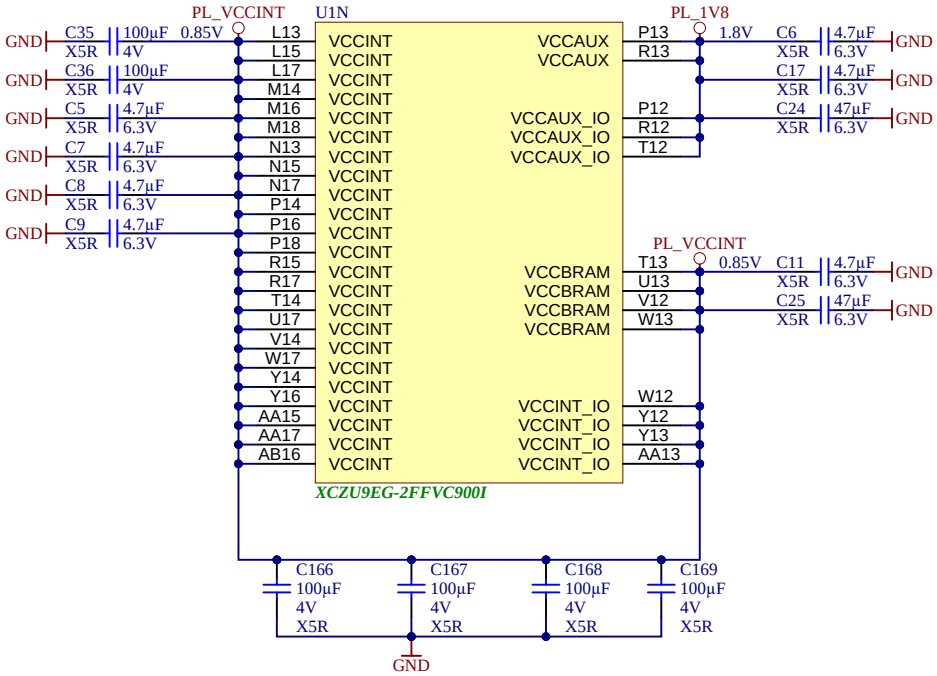

trenz electronic	Title: TE0818 - PL Power		
A4	Number: TE0818 9GI81-A		Rev. 02
Date: 26.09.2023	Copyright: Trenz Electronic GmbH		Page 21 of 31
Filename: ZU_POWER.SchDoc			

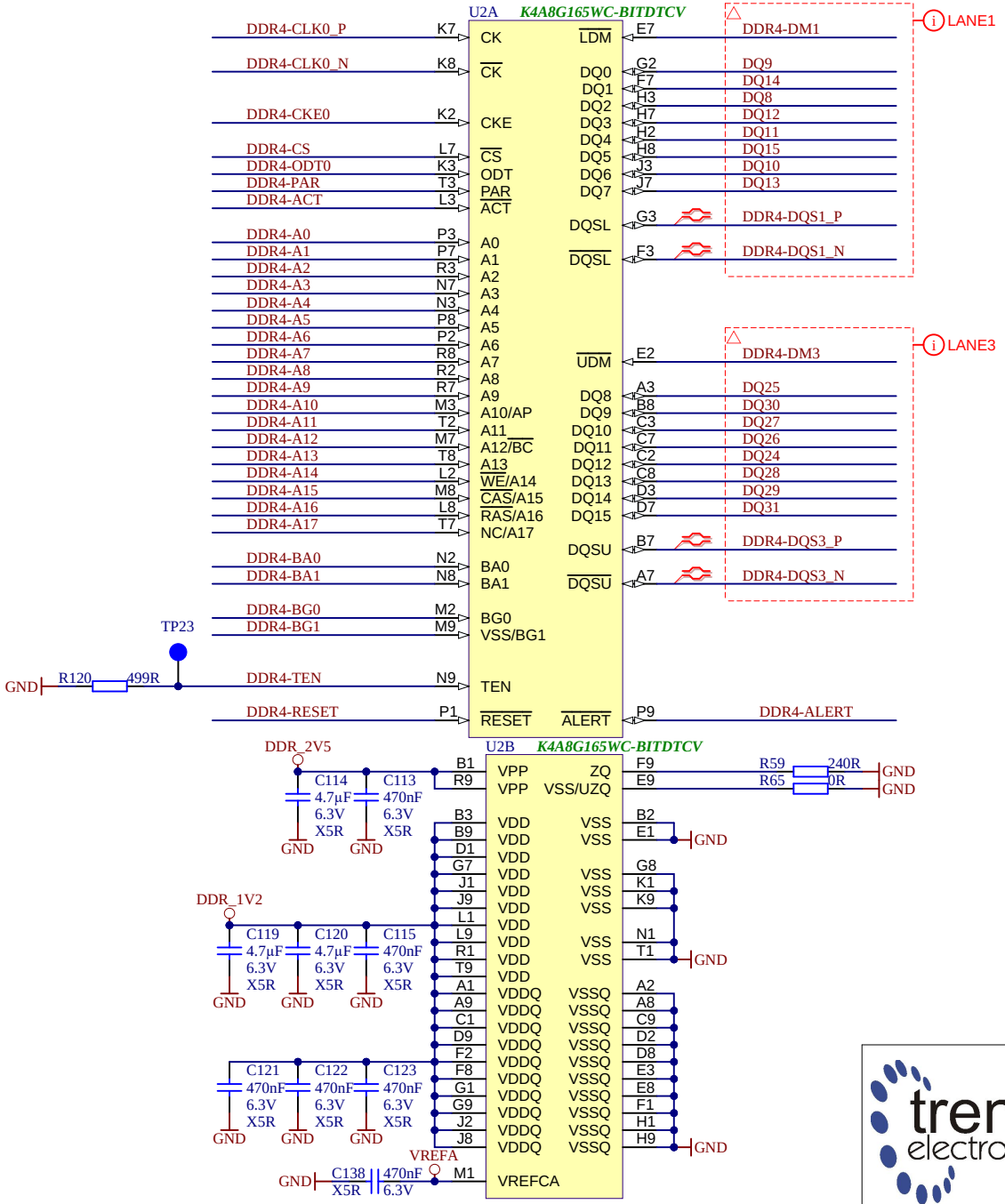

trenz electronic

Title: TE0818 - DDR4 RAM 1			
A4	Number: TE0818 9GI81-A		Rev. 02
Date: 26.09.2023	Copyright: Trenz Electronic GmbH		Page 22 of 31
Filename: DDR4-RAM.SchDoc			

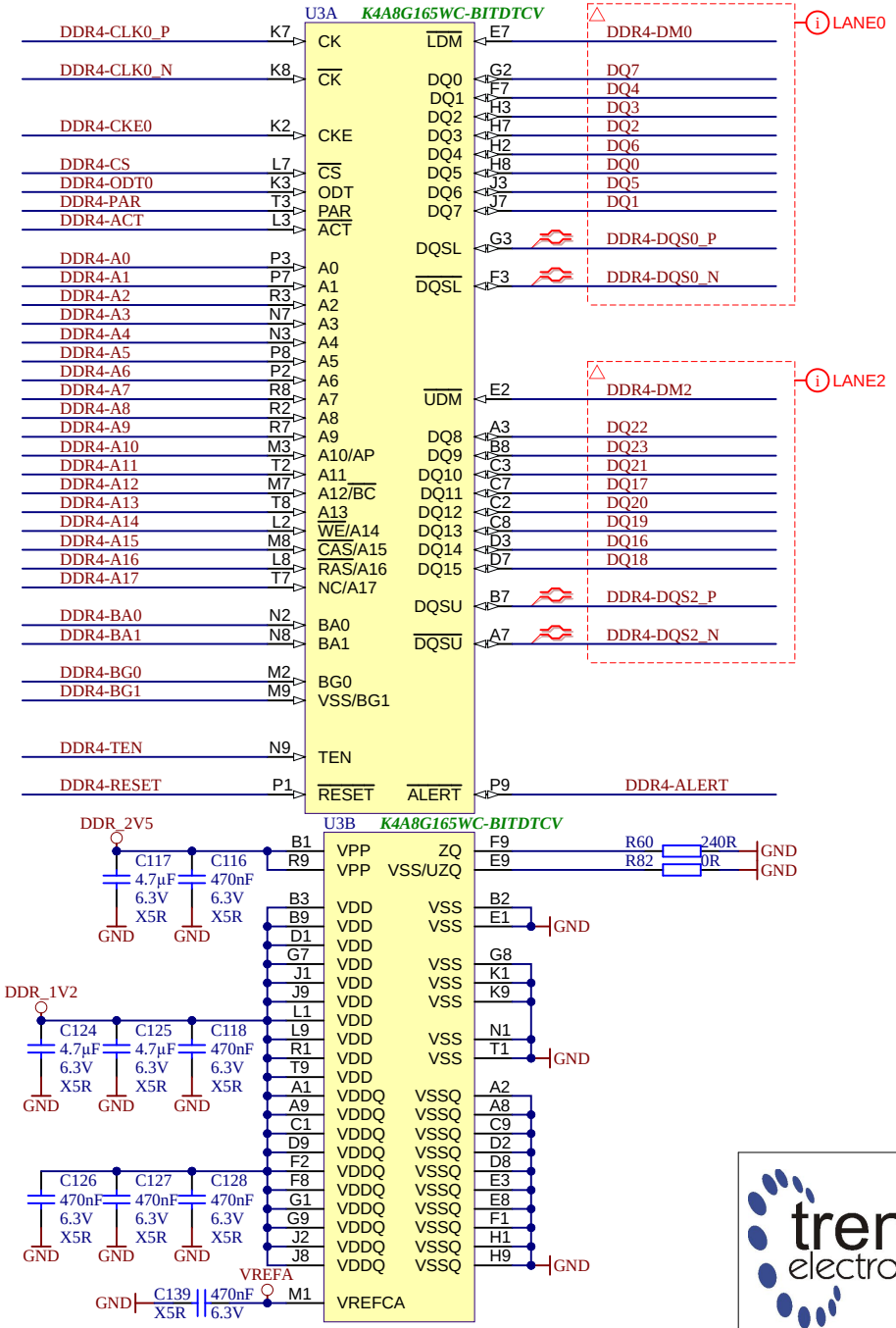

trenz electronic	Title: TE0818 - DDR4 RAM 2		
A4	Number: TE0818 9GI81-A		Rev. 02
Date: 26.09.2023	Copyright: Trenz Electronic GmbH		Page 23 of 31
Filename: DDR4-RAM_2.SchDoc			

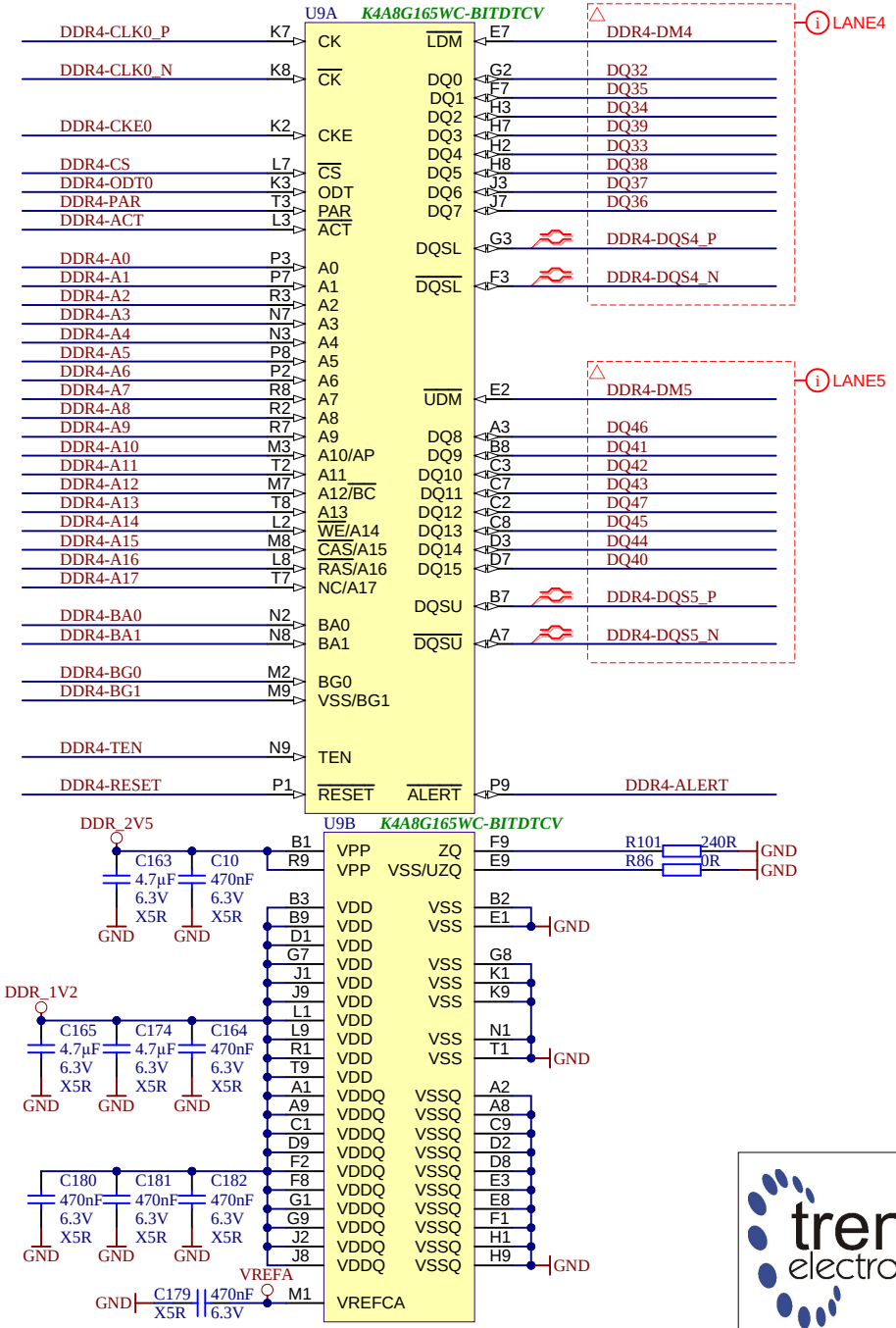

trenz electronic

Title: TE0818 - DDR4 RAM 3			
A4	Number: TE0818 9GI81-A		Rev. 02
Date: 26.09.2023	Copyright: Trenz Electronic GmbH		Page 24 of 31
Filename: DDR4-RAM_3.SchDoc			

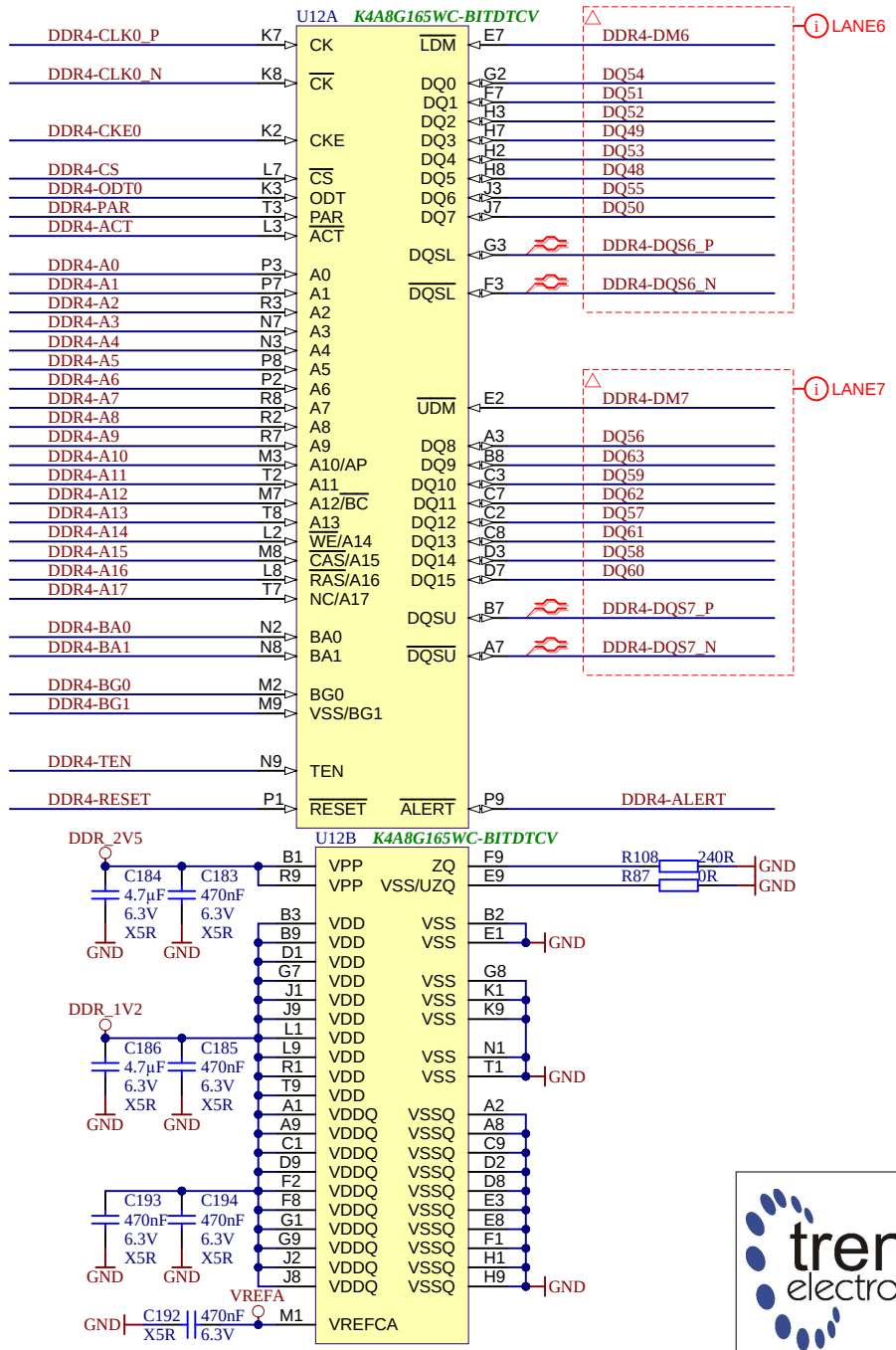

trenz electronic	Title: TE0818 - DDR4 RAM 4		
A4	Number: TE0818 9GI81-A		Rev. 02
Date: 26.09.2023	Copyright: Trenz Electronic GmbH		Page 25 of 31
Filename: DDR4-RAM_4.SchDoc			

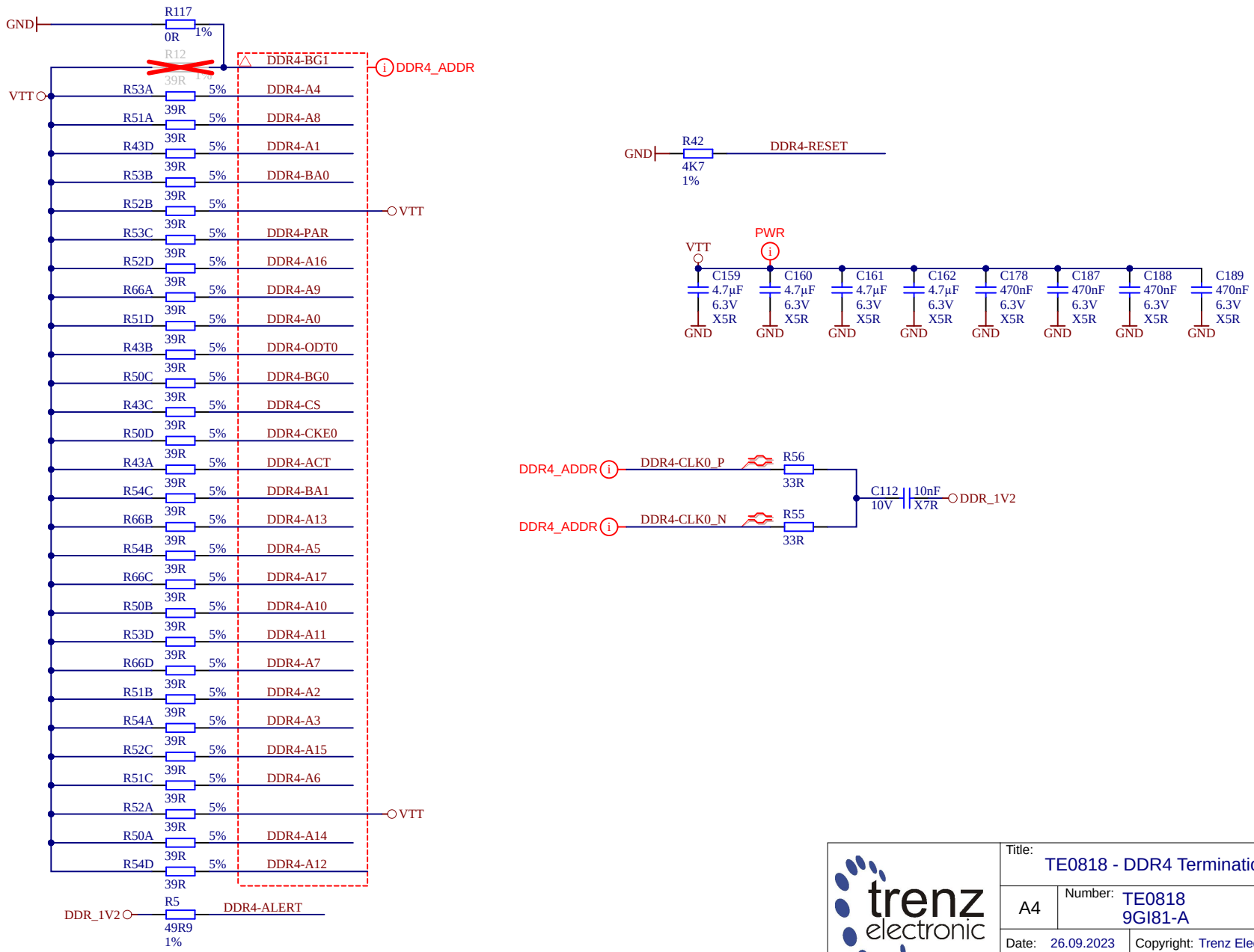

trenz electronic	Title: TE0818 - DDR4 Termination		
A4	Number: TE0818 9GI81-A		Rev. 02
Date: 26.09.2023	Copyright: Trenz Electronic GmbH		Page 26 of 31
Filename: DDR4-TERM.SchDoc			

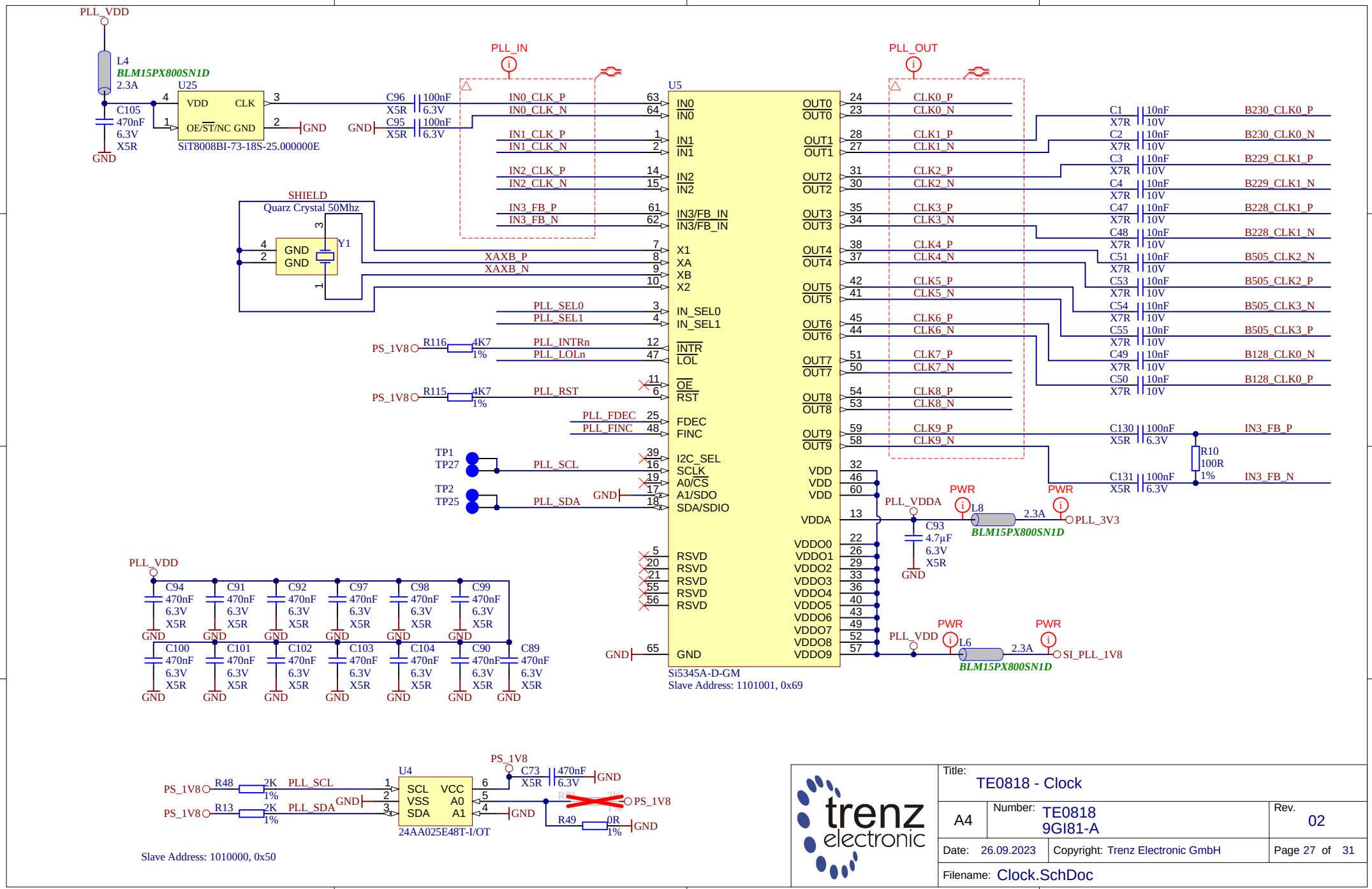
PLL_VDD
L4
BLM15PX800SN1D
2.3A
C105
470nF
6.3V
X5R
GND
U25
VDD
CLK
OE/ST/NC
GND
SiT8008BI-73-18S-25.000000E
C96
100nF
6.3V
X5R
C95
100nF
6.3V
X5R
PLL_IN
PLL_OUT
U5
IN0_CLK_P
IN0_CLK_N
IN1_CLK_P
IN1_CLK_N
IN2_CLK_P
IN2_CLK_N
IN3_FB_P
IN3_FB_N
SHIELD
Quarz Crystal 50Mhz
Y1
XAXB_P
XAXB_N
PLL_SEL0
PLL_SEL1
PLL_INTRn
PLL_LOLn
PLL_RST
PLL_FDEC
PLL_FINC
PLL_SCL
PLL_SDA
R116
4K7
1%
R115
PS_1V8
TP1
TP27
TP2
TP25
CLK0_P
CLK0_N
CLK1_P
CLK1_N
CLK2_P
CLK2_N
CLK3_P
CLK3_N
CLK4_P
CLK4_N
CLK5_P
CLK5_N
CLK6_P
CLK6_N
CLK7_P
CLK7_N
CLK8_P
CLK8_N
CLK9_P
CLK9_N
B230_CLK0_P
B230_CLK0_N
B229_CLK1_P
B229_CLK1_N
B228_CLK1_P
B228_CLK1_N
B505_CLK2_N
B505_CLK2_P
B505_CLK3_N
B505_CLK3_P
B128_CLK0_N
B128_CLK0_P
C130
100nF
X5R
6.3V
C131
R10
100R
IN3_FB_P
IN3_FB_N
PLL_VDDA
PWR
L8
2.3A
PLL_3V3
C93
4.7µF
L6
SI_PLL_1V8
Si5345A-D-GM
Slave Address: 1101001, 0x69
C94
C91
C92
C97
C98
C99
C100
C101
C102
C103
C104
C90
C89
470nF
U4
SCL
VSS
SDA
VCC
A0
A1
24AA025E48T-I/OT
R48
R13
2K
C73
R49
0R
Slave Address: 1010000, 0x50
trenz electronic
Title:
TE0818 - Clock
A4
Number:
TE0818
9GI81-A
Rev.
02
Date: 26.09.2023
Copyright: Trenz Electronic GmbH
Page 27 of 31
Filename: Clock.SchDoc

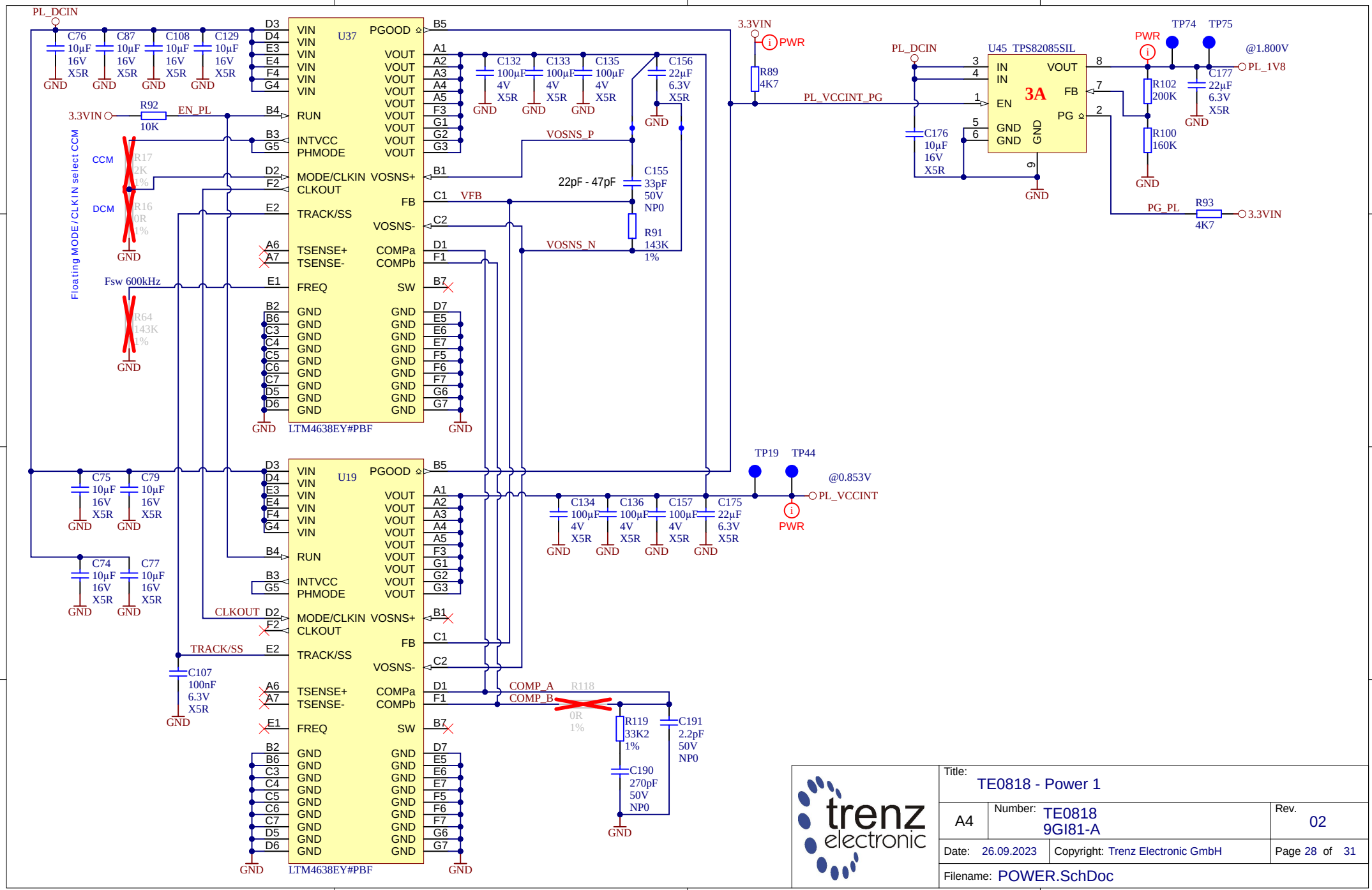

trenz electronic	Title: TE0818 - Power 1		
A4	Number: TE0818 9GI81-A		Rev. 02
Date: 26.09.2023	Copyright: Trenz Electronic GmbH		Page 28 of 31
Filename: POWER.SchDoc			

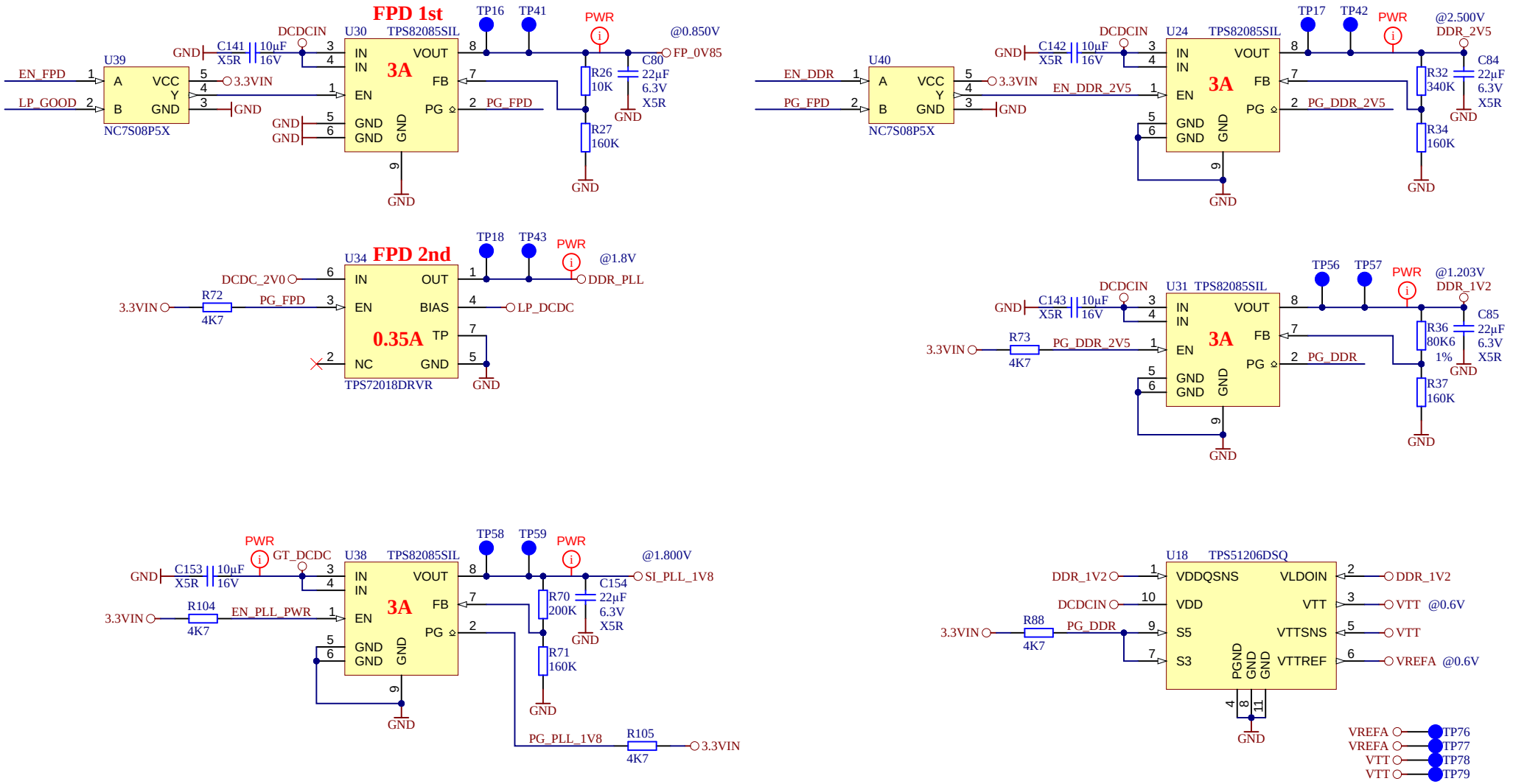

Title: TE0818 - Power 2		
A4	Number: TE0818 9GI81-A	Rev. 02
Date: 26.09.2023	Copyright: Trenz Electronic GmbH	Page 29 of 31
Filename: POWER_2.SchDoc		

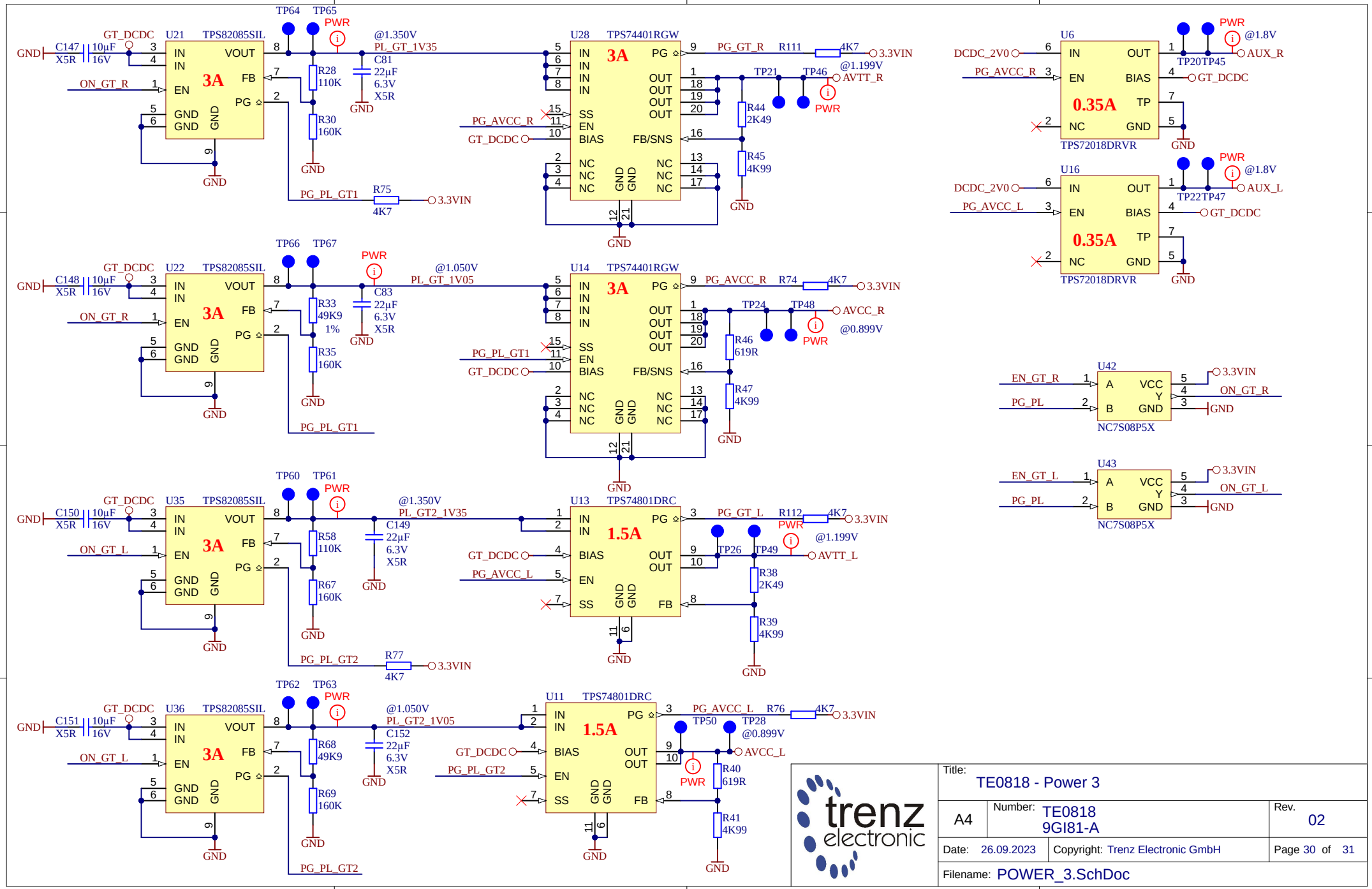
U21 TPS82085SIL 3A
U28 TPS74401RGW 3A
U6 TPS72018DRVR 0.35A
U16 TPS72018DRVR 0.35A
U22 TPS82085SIL 3A
U14 TPS74401RGW 3A
U42 NC7S08P5X
U43 NC7S08P5X
U35 TPS82085SIL 3A
U13 TPS74801DRC 1.5A
U36 TPS82085SIL 3A
U11 TPS74801DRC 1.5A
@1.350V PL_GT_1V35
@1.050V PL_GT1_1V05
@1.350V PL_GT2_1V35
@1.050V PL_GT2_1V05
@1.199V AVTT_R
@0.899V AVCC_R
@1.199V AVTT_L
@0.899V AVCC_L
@1.8V AUX_R
@1.8V AUX_L
3.3VIN
GND
PWR
trenz electronic
Title: TE0818 - Power 3
A4
Number: TE0818 9GI81-A
Rev. 02
Date: 26.09.2023
Copyright: Trenz Electronic GmbH
Page 30 of 31
Filename: POWER_3.SchDoc

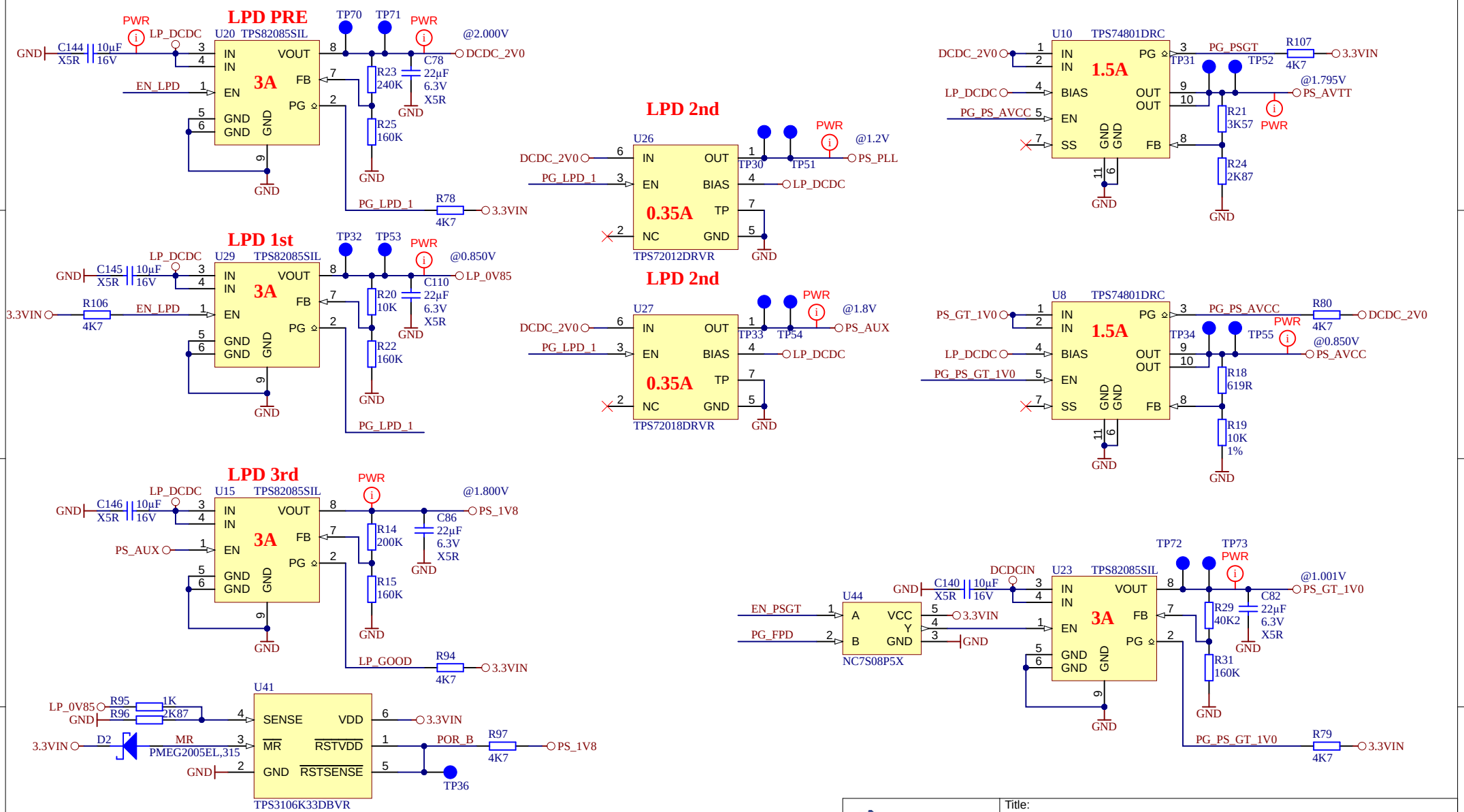

Net Name	Voltage Rail	Low Detect
LP_0V85	0.85 V	0.743 V
3.3VIN	3.3 V	2.941 V

trenz electronic

Title: TE0818 - Power 4		
A4	Number: TE0818 9GI81-A	Rev. 02
Date: 26.09.2023	Copyright: Trenz Electronic GmbH	Page 31 of 31
Filename: POWER_4.SchDoc		