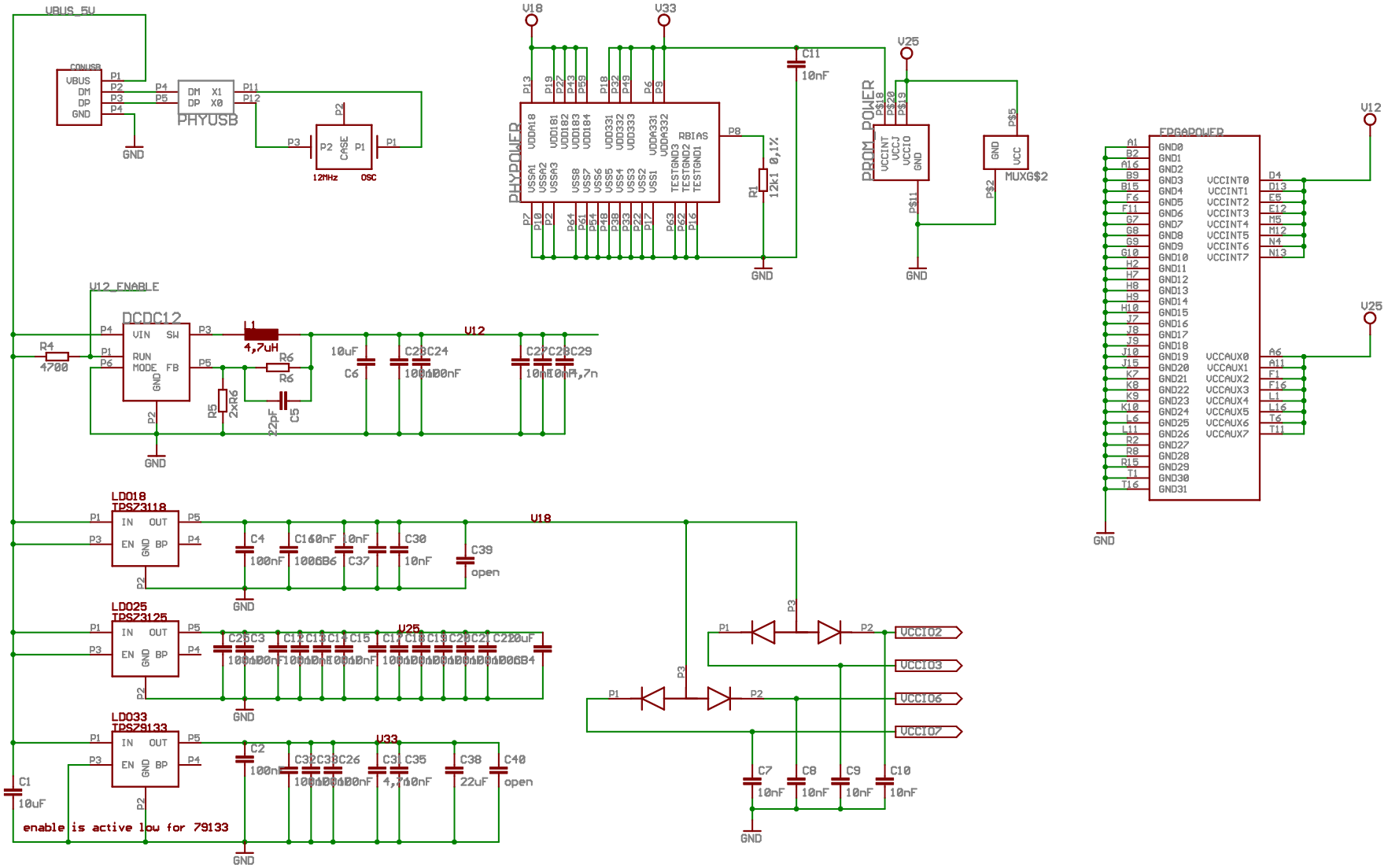

(c) 2004 by Kolja Sulimma
Trenz Electronic GmbH
http://www.trenz-electronic.de

USB and Power

TITLE: xc3smicromodule

Document Number:

REV: 1.0

Date: 10.12.2004 15:07:07

Sheet: 1/4

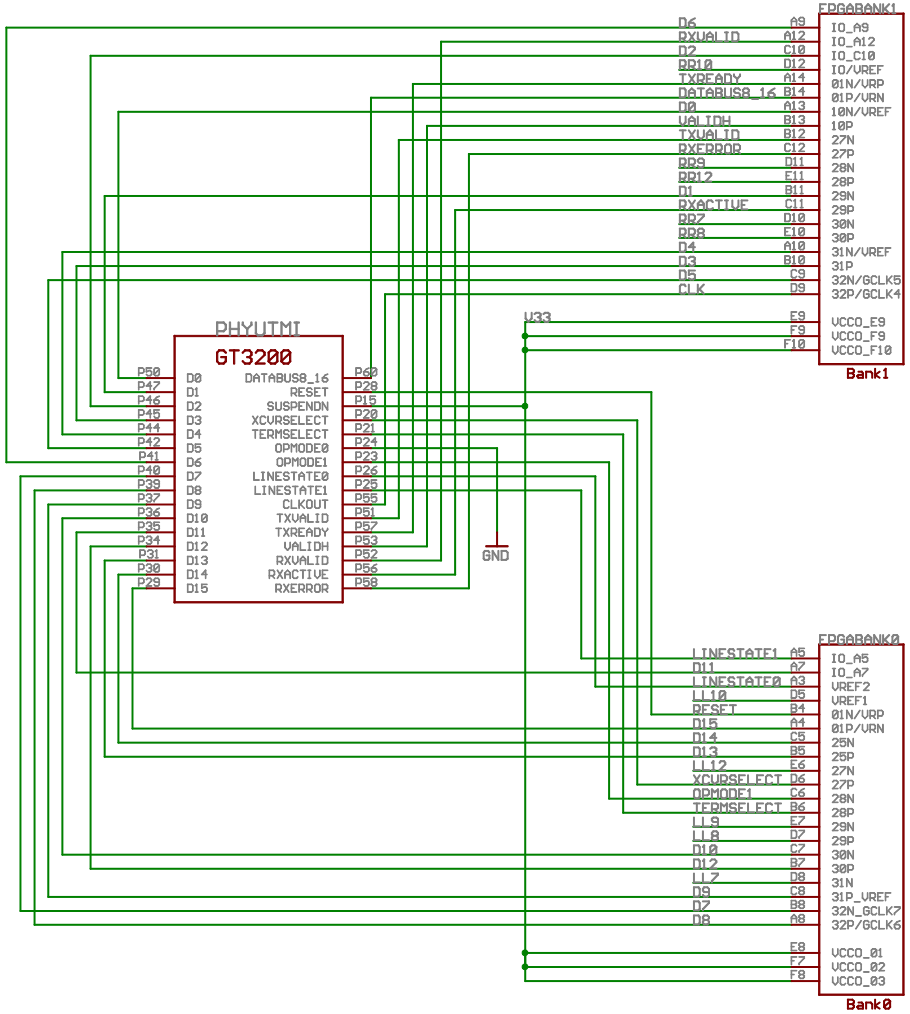

(c) 2004 by Kolja Sulimma
Trenz Electronic GmbH
http://www.trenz-electronic.de

UTMI	
TITLE: xc3smicromodule	
Document Number:	REV: 1.0
Date: 10.12.2004 15:07:07	Sheet: 2/4

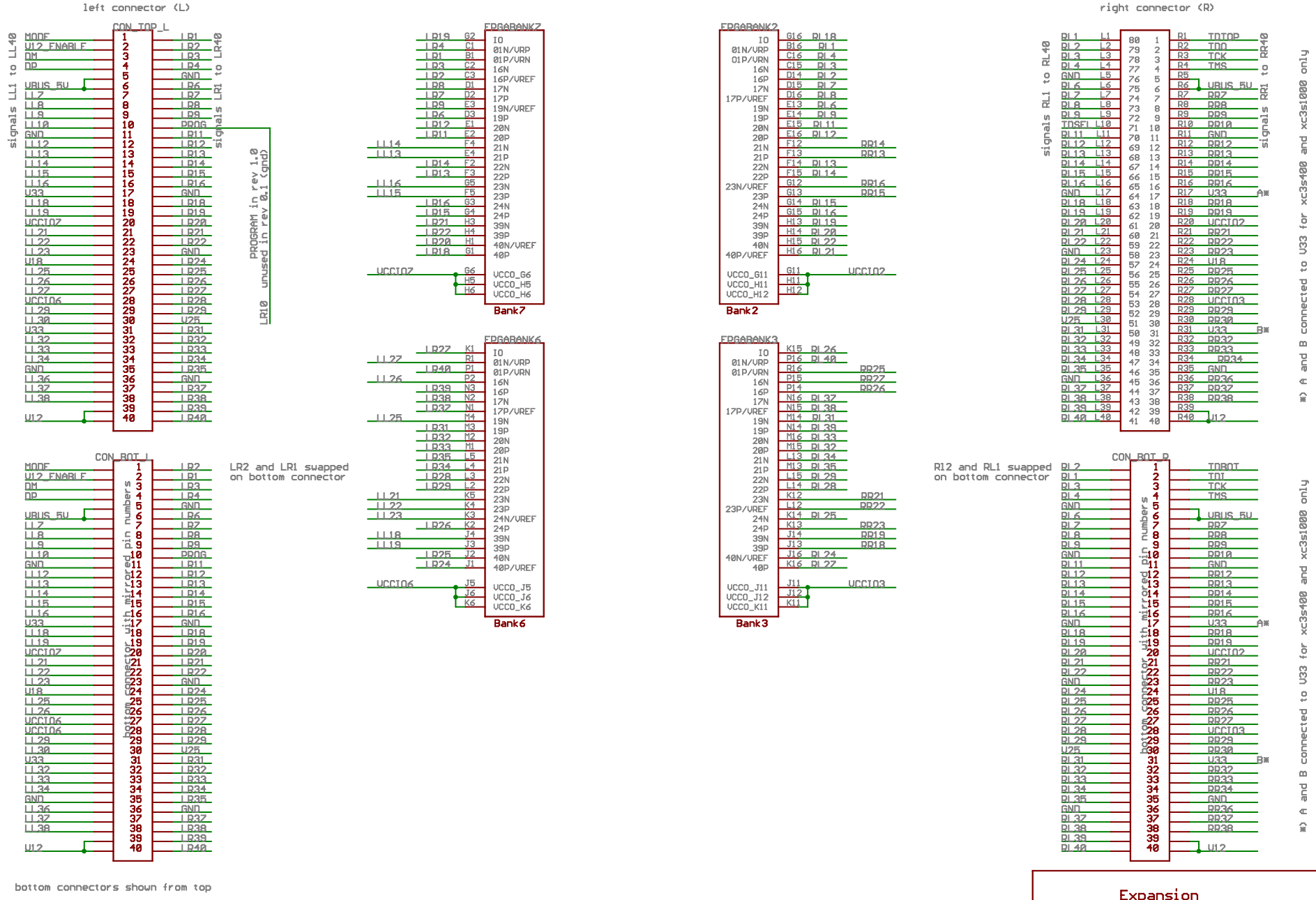

(c) 2004 by Kolja Sulimma
Trenz Electronic GmbH
http://www.trenz-electronic.de

Expansion

TITLE: xc3smicromodule

Document Number:

REV: 1.0

Date: 10.12.2004 15:07:07

Sheet: 3/4

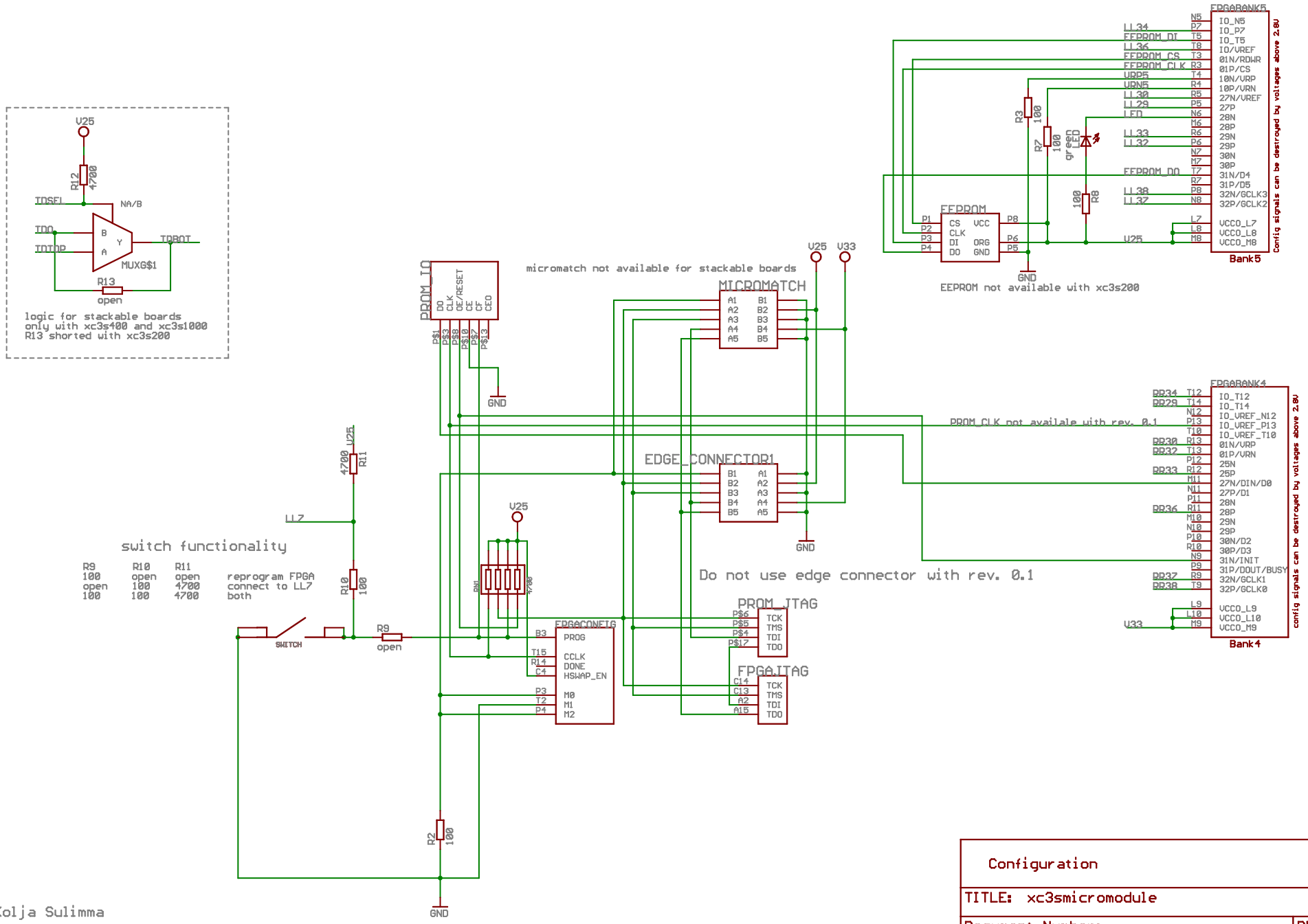

(c) 2004 by Kolja Sulimma
Trenz Electronic GmbH
http://www.trenz-electronic.de

Configuration	
TITLE: xc3smicromodule	
Document Number:	REV: 1.0
Date: 10.12.2004 15:07:07	Sheet: 4/4