Trenz Electronic TE0300 series
Spartan-3E industrial-grade FPGA-micromodules

Introduction

Trenz Electronic TE0300 industrial FPGA micro-modules integrate a leading-edge Xilinx Spartan-3E FPGA, an USB 2.0 microcontroller, DDR RAM, configuration flash and power supply on a tiny footprint (*even smaller than half a credit card!*) . A large number of configurable I/Os are provided via shock-proof B2B (board-to-board) mini-connectors.

The module is intended to be used as an OEM board, or to be combined with our carrier boards. It is a powerful system widely used for educational and research activities.

Boards with other configurations, larger FPGA's or equipped with industrial temperature grade parts are available on request.

Software for SPI flash programming over USB as well as reference designs for high speed data transfer over USB are included.

Features

- High-density plug-in Xilinx Spartan-3E modules
- USB 2.0 interface with high speed data rate
- SPI flash for in-system configuration
- SPI flash accessible via USB
- Power supply via USB or external 5 V input
- High-power switch-mode power-supplies on-board (1 A for each voltage rail)
- Low-cost and highly versatile
- Flexible expansion via high-density connectors
- Most IO's on the B2B connectors are routed as LVDS lines
- Evenly-spread supply-pins for good signal integrity
- Shockproof B2B (board-to-board) connectors
- Industrial temperature grade available upon request

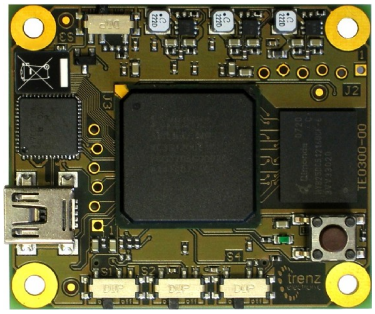

TE0300 in actual size.

Applications

- IP development
- Digital signal processing
- Image processing
- Cryptography
- Industrial control
- General-purpose prototyping platform

Specifications

- Xilinx Spartan-3E XC3S500E to XC3S1600E FPGA
- Cypress FX2 USB 2.0 CY7C68013A-56LFXC microcontroller
- 16 Mbit to 64 Mbit SPI Flash for configuration and user data
- up to 512 MBit DDR RAM
- 16 kbit I2C EEPROM
- 104 I/Os + 6 inputs
- Power supply via either USB bus or B2B (board-to-board) 5 V DC
- Programming is implemented via JTAG, SPI or USB.
- 2x80-pin Hirose DF17 B2B Connectors
- 1 LED
- 1 push button
- Size only 40.5mm x 47.5mm

Trenz Electronic TE0300 series
Spartan-3E industrial-grade FPGA-micromodules

TE0300 series overview chart

model	gates M	block RAM kbit	clock MHz	DDR RAM Mbit	temp. grade
TE0300-01	1.2	504	125	512	comm.
TE0300-01I	1.2	504	125	512	ind.
TE0300-01NR	1.2	504	125	-	comm.
TE0300-01B	1.6	648	125	521	comm.
TE0300-01BLP	1.6	648	100	521	comm.

legend

- comm. = commercial grade temperature
- ind. = industrial grade temperature

Available for Download

- User manual
- Application notes
- Demo project files
- Schematics and layout diagram
- CAD library files
- Data sheets of major components

Ordering Information

To get more information and order, please visit our websites:

- http://www.trenz-electronic.de
- http://shop.trenz-electronic.de

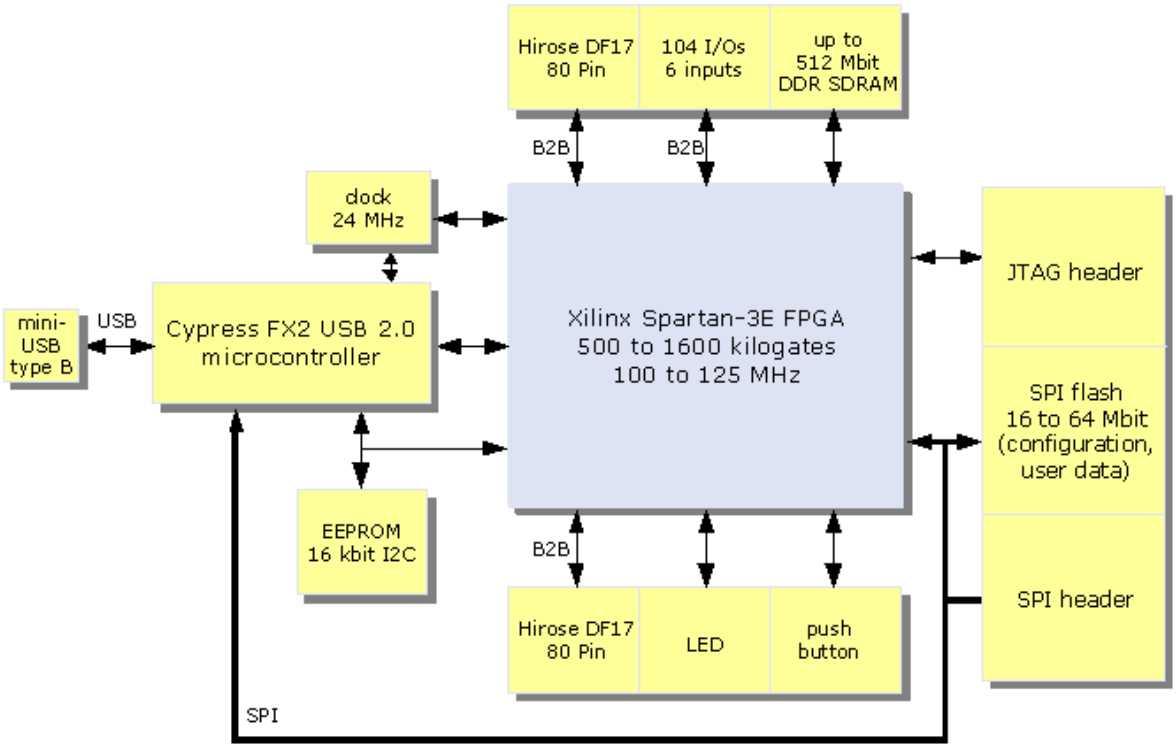

Trenz Electronic GmbH
Borriestrasse 61 | 32257 Bünde|Germany
CEO: Thorsten Trenz
Local Court:
Amtsgericht Bad Oeynhausen | HRB7185
fon+49 (0) 5223 / 41652
fax+49 (0) 5223 / 48945
e-mail info@trenz-electronic.de
http://www.trenz-electronic.de

Document: PB-TE0300, Rev. 1.01 as of 2008-02-14