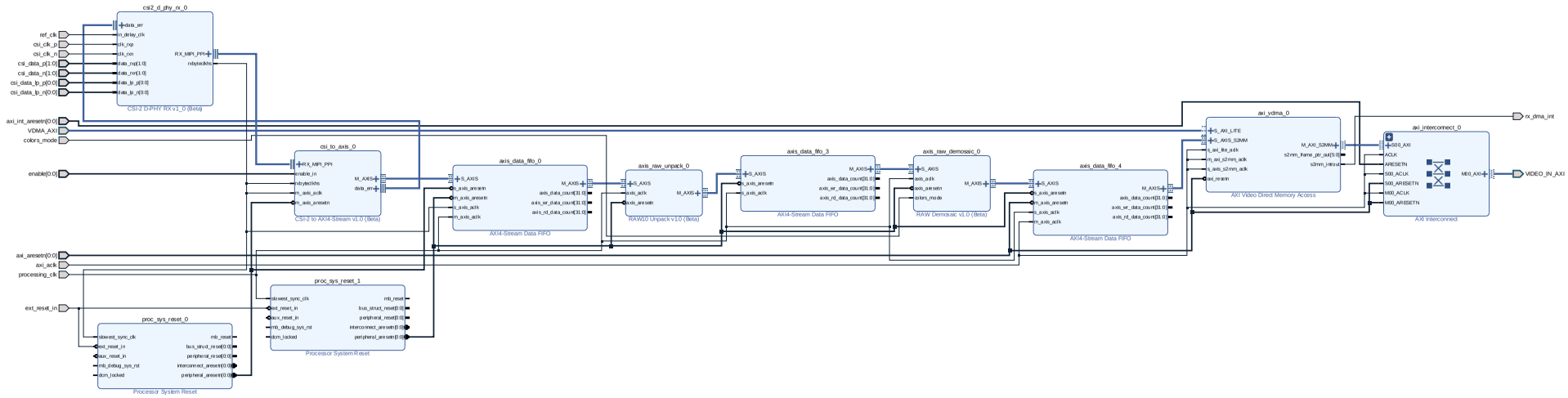
csi2_d_phy_rx_0
CSI-2 D-PHY RX v1.0 (Beta)
ref_clk
csi_clk_p
csi_clk_n
csi_data_p[1:0]
csi_data_n[1:0]
csi_data_lp_p[0:0]
csi_data_lp_n[0:0]
axi_int_aresetn[0:0]
VDMA_AXI
colors_mode
enable[0:0]
axi_aresetn[0:0]
axi_aclk
processing_clk
ext_reset_in
csi_to_axis_0
CSI-2 to AXI4-Stream v1.0 (Beta)
axis_data_fifo_0
AXI4-Stream Data FIFO
axis_raw_unpack_0
RAW10 Unpack v1.0 (Beta)
axis_data_fifo_3
AXI4-Stream Data FIFO
axis_raw_demosaic_0
RAW Demosaic v1.0 (Beta)
axis_data_fifo_4
AXI4-Stream Data FIFO
axi_vdma_0
AXI Video Direct Memory Access
axi_interconnect_0
AXI Interconnect
rx_dma_int
VIDEO_IN_AXI
proc_sys_reset_1
Processor System Reset
proc_sys_reset_0
Processor System Reset