J2
U2
R6
C7
R4
R9
R11
C5
C10
C11
C183
U46
J4
PM1
C39
C40
R19
U14
T8
T7
U15
PM4
C49
C50
R23
U17
T10
T9
U18
J3
C59
C60
R27
U20
T12
T11
U21
J1
C1
R5
R3
R2
C38
R1
U1
C3
C2
S/N
PM6
C8
+
-

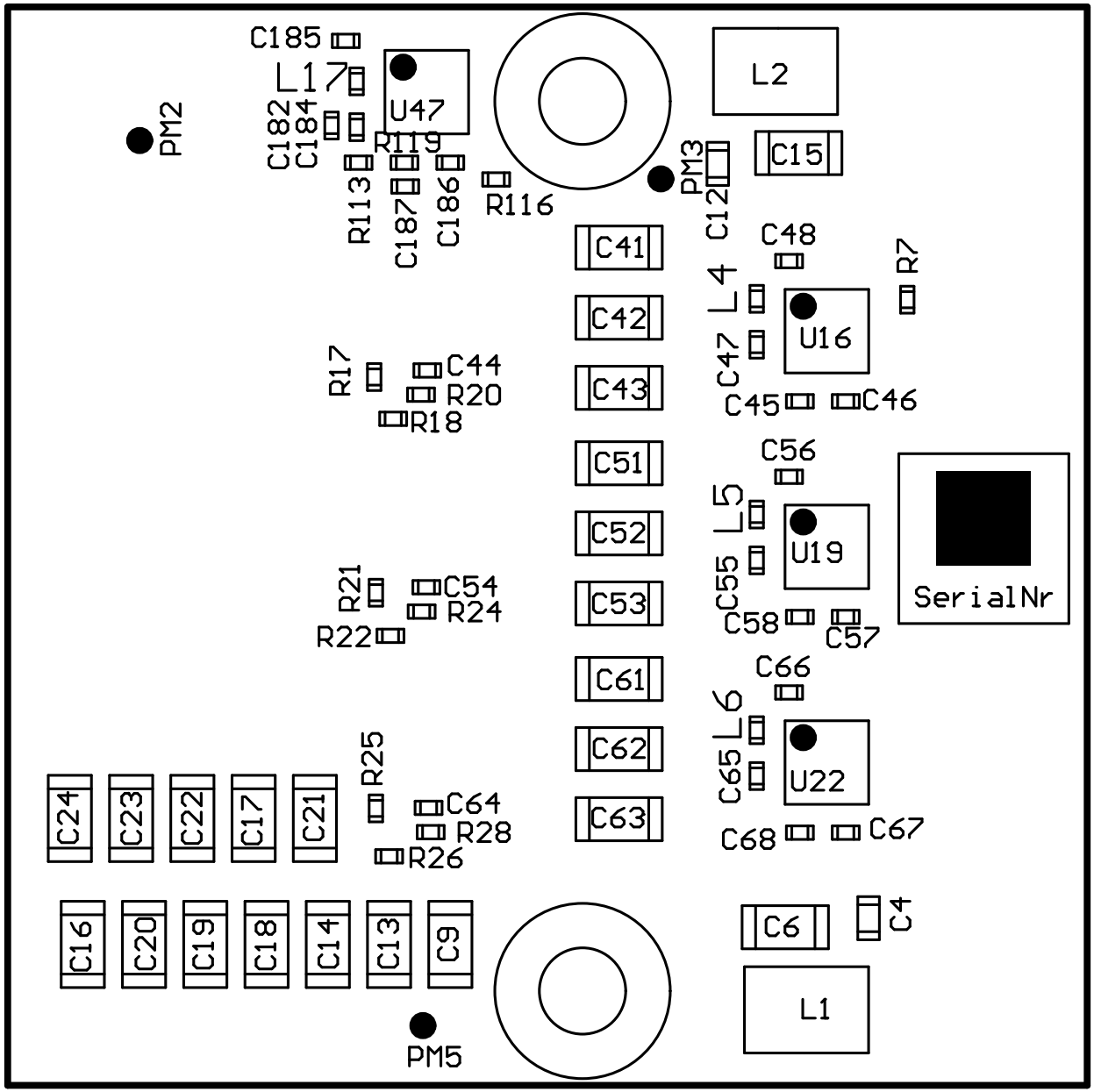
C185
L17
U47
PM2
C182
C184
R119
R113
C187
C186
R116
PM3
L2
C15
C12
C41
C42
C43
C51
C52
C53
C61
C62
C63
C48
R7
L4
U16
C47
C45
C46
R17
C44
R20
R18
C56
L5
U19
C55
C58
C57
SerialNr
R21
C54
R24
R22
C66
L6
U22
C65
C68
C67
R25
C64
R28
R26
C24
C23
C22
C17
C21
C16
C20
C19
C18
C14
C13
C9
PM5
C6
C4
L1

Top View

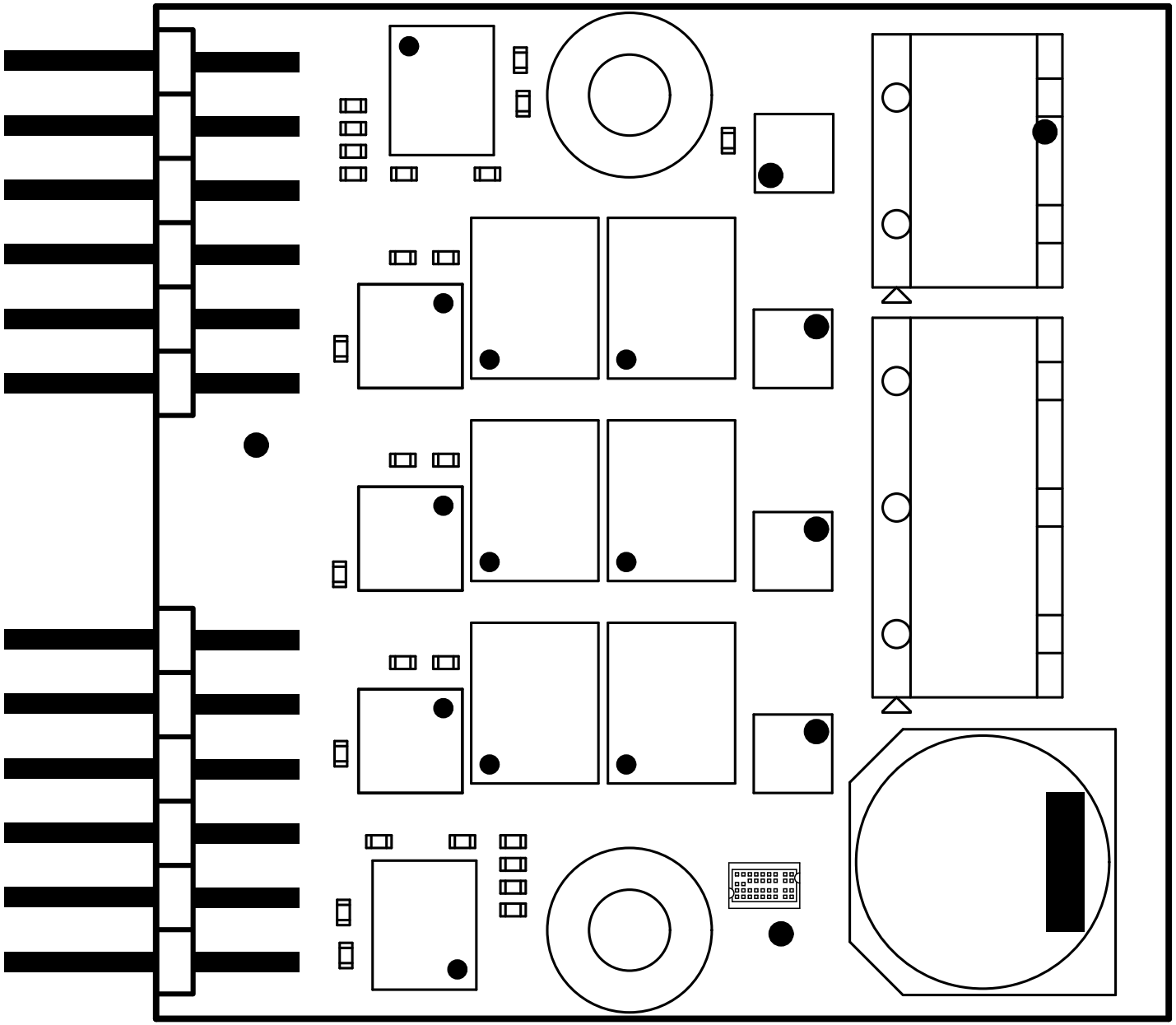

Bottom View